walvoil

MOTION BY PEOPLE

DPX Series

Full Flow Sharing Sectional Valve

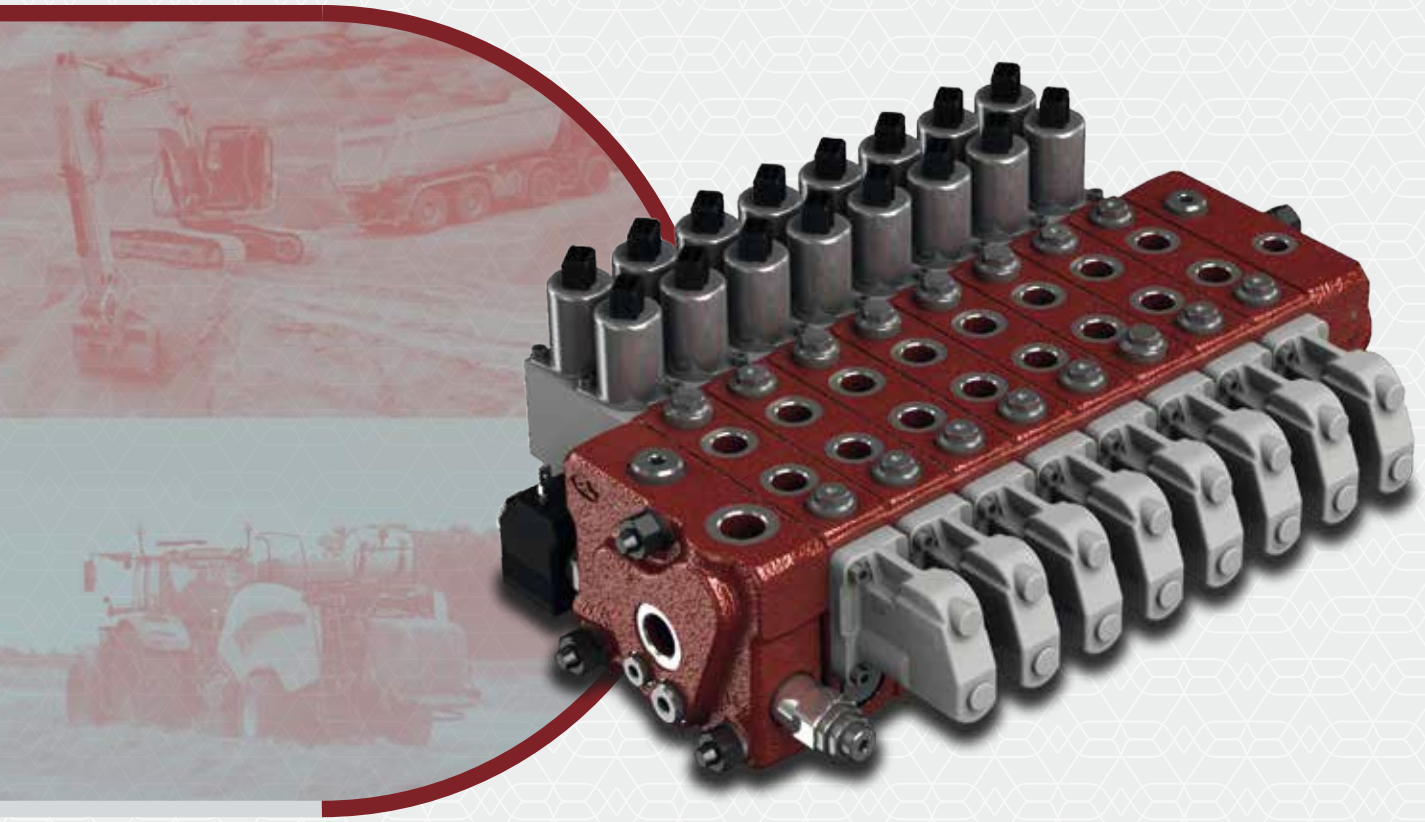

DIRECTIONAL VALVES

Additional information
This catalogue shows the product in the most standard configurations.
Please contact Sales Dpt. for more detailed information or special request.

WARNING!
All specifications of this catalogue refer to the standard product at this date.
Walvoil, oriented to a continuous improvement, reserves the right to discontinue, modify or revise the specifications, without notice.

WALVOIL IS NOT RESPONSIBLE FOR ANY DAMAGE CAUSED BY AN INCORRECT USE OF THE PRODUCT.

1st edition February 2026

Content

DPX050 ..... page 9

DPX100 ..... page 47

DPX160 ..... page 119

Accessories

Intermediate sections ..... page 157
Coils and connectors 160

Installation and maintenance

Main rules ..... page 164
Connection between two directiona valves 165
Electrohydraulic controls connection 168

Appendice A ..... page 170

The DPX series

The DPX Series is a family of open/closed center post-pressure compensated sectional valves designed specifically for Mobile Applications. The DPX series provides exceptional controllability, efficiency and flexibility for applications requiring up to 160 l/min *(42 US gpm)* flow rates. The DPX Series is available in three different sizes: DPX050, DPX100 and DPX160, also available in High Pressure configuration.

DPX050

DPX100

DPX160

The Flow Sharing technology

The DPX Series control valves adds the benefit of Flow Sharing technology to the standard Load Sensing valve. The DPX Series patented compensator maintains the margin pressure as a costant pressure drop across the spool metering area. The result is a flow to the workport dependent only on spool position. In case of flow saturation, the effective pressure drop across all spools is reduced equally. This results in proportional flow reduction at each section.

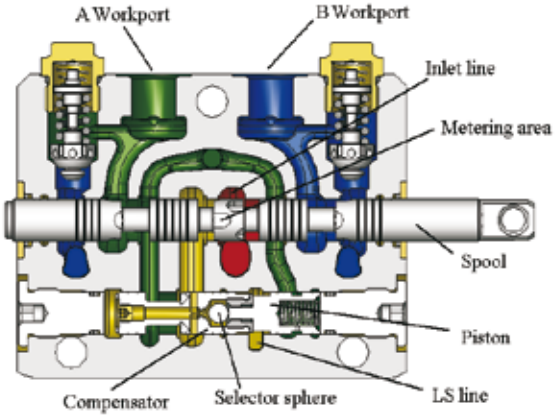

In case of flow saturation, the flow demand is higher than the maximum pump flow, therefore the margin pressure is reduced according to the formula (dimensionless indication):

$$Q \alpha A \sqrt{\Delta P / \rho}$$

Q = flow to workports
ΔP = pressure drop across metering area
A = metering area
ρ = oil density

Since all spools have the same pressure drop across the metering area, then all flows are reduced proportionally. This allows the operator to mantain control of all functions, though at reduced speed of active functions.

Advantages and options

- Energy saving on closed center system, is produced only required flow and pressure by the actuators.
- The flow sharing technology permits multiple movements even with flow saturation.
- Flow passage design allows high P and T flow rate in a standard valve dimension.
- Inlet section with unidirectional restrictor option suitable for dumping the pressure peaks from the LS line to the compensator and vice versa.
- High Pressure version (HP) stackable with standard one.
- Working section option with priority features in saturation conditions.
- Dedicated spools for special functions (customized flows, back pressures, pressure control).

For special options please contact Sales Dept.

Guide to configuration

Configuration with mechanical, hydraulic or electric controls

This configuration needs standard inlet sections, working sections without pilot lines and standard outlet sections.

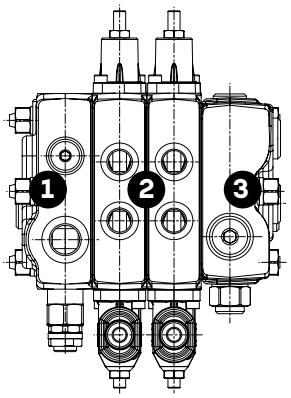

DPX050
1: AM or AN inlet sections
2: P or Q working sections
3: RP or RQ working sections with outlet

DPX100
1: AM or AN inlet sections
2: P or Q working sections
3: RF outlet sections

DPX160
1: AM or AN inlet sections
2: P or Q working sections
3: RC outlet sections

Configuration with only electrohydraulic or mixed controls

Electrohydraulic configuration (pic. 1) needs standard inlet sections, working and outlet sections with pilot lines.
In a valve configurated with electrohydraulic mixed sections (two-sides and one side type controls), the two-side control section have to be positioned after (on the right) one-side control section, close to the outlet one.
In a mixed control configuration valve (pic. 2) electrohydraulic control sections have to be positioned after (on the right) manual/hydraulic/electric control sections, close to the outlet section.
In case of need to include manual/hydraulic/electric control sections between 2 electro-hydraulic control sections, or between one of these and outlet section, it is necessary to require specific working sections kits able to cross pilot line.

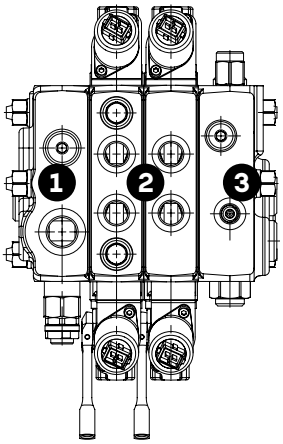

(pic. 1)

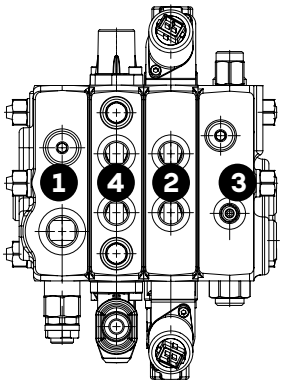

(pic. 2)

DPX050
1: AM or AN inlet sections
2: PZ, QZ, PE or QE working sections
3: RPZ, RQZ, RPE or RQE working sections with outlet
4: P or Q working sections

DPX100
1: AM or AN inlet sections
2: PE, QE. PZ or QZ working sections
3: RDN or RDR outlet sections
4: P or Q working sections

DPX160
1: AM or AN inlet sections
2: PE or QE working sections
3: RCR or RCN outlet sections
4: P or Q working sections

Working conditions

This catalogue shows technical specifications and diagrams measured with mineral oil of 46 mm²/s - *46 cSt* viscosity at *40°C - 104°F* temperature.

		DPX050	DPX100 Std.	DPX100 HP	DPX100 HF	DPX160 Std.	DPX160 HP
Nominal flow rating	inlet port with compensator, with 14 bar - *200 psi* stand-by (margin pressure)	80 l/min *21 US gpm*	120 l/min *32 US gpm*	120 l/min *32 US gpm*	>120 l/min *>32 US gpm*	230 l/min *61 US gpm*	
	working ports, with 14 bar - *200 psi* stand-by (margin pressure)	50 l/min *13 US gpm*	90 l/min *24 US gpm*	90 l/min *24 US gpm*	120 l/min *32 US gpm*	160 l/min *42 US gpm*	
Max. pressure	**P** inlet port	300 bar *4350 psi*	300 bar *4350 psi*	380 bar(1) *5550 psi*(1)	380 bar(1) *5550 psi*(1)	300 bar	380 bar (3)
	A and **B** working ports	350 bar *5100 psi*	300 bar *4350 psi*	420 bar(1) *6000 psi*(1)	420 bar(1) *6000 psi*(1)	300 bar	420 bar (3)
Back pressure (max.) on outlet **T** port	with mechanical devices	10 bar - *145 psi*					
	with hydraulic/pneumatic devices	30 bar - *435 psi*					
	with electric/electrohydraulic devices	see related pages					
Standard internal leakage A(B)⇒T	**On std.working section**						
	Δp=100 bar - *1450 psi*	max. 6.5 cm³/min *max. 0.40 in³/min*	max. 9 cm³/min *max. 0.55 in³/min*			max. 12 cm³/min *max. 0.73 in³/min*	
	with port valves, Δp=100 bar - *1450 psi*	max. 11.5 cm³/min *max. 0.70 in³/min*	max. 14 cm³/min *max. 0.85 in³/min*			max. 17 cm³/min *max. 1.04 in³/min*	
	On Low Leak section						
	Δp=180 bar	max. 3 cm³/min *max. 0.18 in³/min*	max. 3 cm³/min *max. 0.18 in³/min*	-	-	-	
	with port valves, Δp=180 bar - *2600 psi*	max. 4 cm³/min *max. 0.24 in³/min*	max. 4 cm³/min *max. 0.24 in³/min*	-	-	-	
Fluido		Mineral oil					
Fluid temperature range	standard configuration	from -20°C to 100°C - *from -4°F to 212°F*					
Viscosity	operating range	from 15 to 75 mm²/s - *from 15 to 75 cSt*					
	min.	12 mm²/s - *12 cSt*					
	max.	400 mm²/s - *400 cSt*					
Contamination level	max	19/18/15 - ISO 4406 - *NAS 1638 class 9*					
Environmental temperature for working conditions	with mechanical devices	from -40°C to 60°C - *from -40°F to 140°F*					
	with hydraulic/pneumatic devices	from -30°C to 60°C - *from -22°F to 140°F*					
	with electric/electrohydraulic devices	from -20°C to 50°C - *from -4°F to 122°F*					

NOTES: (1) According to NFPA T 2.6.1., fatigue rating verified for 1 million cycles on 6 sample valves with test Pressure = 1.23 x Max. pressure indicated - (2) According to NFPA T 2.6.1., fatigue rating verified for 1 million cycles on 5 sample valves with test Pressure = 1.16 x Max. pressure indicated - (3) Fatigue rating verified for 1 million cycles on 6 sample valves with Test Pressure = 1.10 x Max. pressure indicated

Standard threads

REFERENCE STANDARD		BSP	UN-UNF	METRIC[4]	METRIC ISO[4]	NPTF
THREAD ACCORDING TO		ISO 228/1 BS 2779	ISO 263 ANSI B1.1 unified	ISO 262	ISO 262	ANSI B1.20.3
CAVITY DIMENSION ACCORDING TO	ISO	1179	11926	9974-1	6149	
	SAE		J1926		J2244	J476a
	DIN	3852-2 shape X or Y		3852-1 shape X or Y		

NOTE [4]: Metric threading is available on request

PORTS THREADING	DPX050		DPX100		DPX160	
	BSP	UN-UNF	BSP	UN-UNF	BSP	UN-UNF
P inlet	G 1/2	3/4-16 (SAE 8)	G 1/2 - G 3/4[5]	7/8-14 (SAE10) 1 1/16-12 (SAE12)[5]	G 3/4	1 1/16-12 (SAE12)
A and **B** ports	G 3/8	9/16-18 (SAE 6)	G 3/8 G 1/2[5] - G 3/4[6]	3/4-16 (SAE8) 1 1/16-12 (SAE12)[6]	G 3/4	1 1/16-12 (SAE12)
T outlet	G 1/2	3/4-16 (SAE 8)	G 1/2 - G 3/4[5]	7/8-14 (SAE10) 1 1/16-12 (SAE12)[5]	G 1	1 5/16-12 (SAE16)
V pilot	G 1/4	7/16-20 (SAE 4)	G 1/4	9/16-18 (SAE6)	G 1/4	9/16-18 (SAE6)
L drain	G 1/4	9/16-18 (SAE 6)	G 1/4	9/16-18 (SAE6)	G 1/4	9/16-18 (SAE6)
Hydraulic control ports	G 1/4	7/16-20 (SAE 4)	G 1/4	7/16-20 (SAE 4)	G 1/4	9/16-18 (SAE 6)
Pneumatic control ports			NPTF 1/8-27	NPTF 1/8-27		

NOTE:
[5] - Optional threading / [6] - only for High Flow sections

Content

Dimensional data and performance ..... page 10
Hydraulic circuit
Configuration example with mechanical and hydraulic controls ..... page 11
Configuration example with electrohydraulic controls 11
Guide to configuration
Pressure peak reduction ..... page 12
Directional valve with Low Leak working sections 12
Complete section ordering codes 14
Inlet section
Parts ordering codes ..... page 16
Dimensional data and hydraulic circuit 17
Main pressure relief valve 19
Solenoid operated unloading valve 19
Working and outlet section
Parts ordering code ..... page 20
Dimensional data and hydraulic circuit 24
Spool 27
"A" side spool positioner 29
"B" side spool control kit 31
Proportional hydraulic control 32
Electrohydraulic controls
Performance data ..... page 34
Spool position sensor 36
Two-side electrohyraulic controls 37
One-side electrohydraulic control: "A" side 38
One-side electrohydraulic control: "B" side options 39
Port valves 40
• **DPX050 Low leak**
Complete section ordering codes ..... page 41
Working section
Parts ordering code ..... page 42
Dimensional data and hydraulic circuit 44
Spool 45

Dimensional data and performance

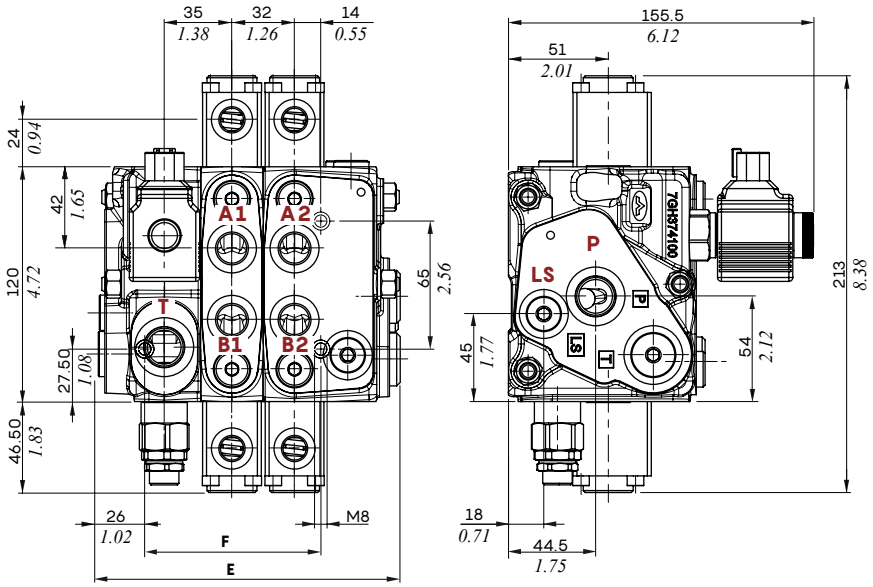

Type	E		F	
	mm	*in*	mm	*in*
DPX050/1	119	*4.69*	57.5	*2.26*
DPX050/2	151	*5.95*	89.5	*3.52*
DPX050/3	183	*7.20*	121.5	*4.78*
DPX050/4	215	*8.46*	153.5	*6.04*
DPX050/5	247	*9.72*	185.5	*7.30*
DPX050/6	279	*10.98*	217.5	*8.56*
DPX050/7	311	*12.24*	249.5	*9.82*
DPX050/8	343	*13.50*	281.5	*11.08*
DPX050/9	375	*14.76*	313.5	*12.34*
DPX050/10	407	*16.02*	345.5	*13.60*
DPX050/11	439	*17.28*	377.5	*14.86*
DPX050/12	471	*18.54*	409.5	*16.12*

P⇒T Pressure drop inlet compensator (margin pressure)

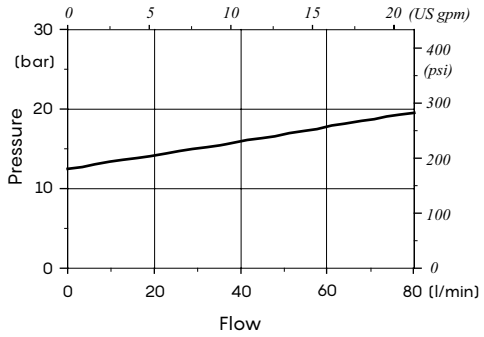

A(B)⇒T pressure drop (standard spool @ max.stroke)

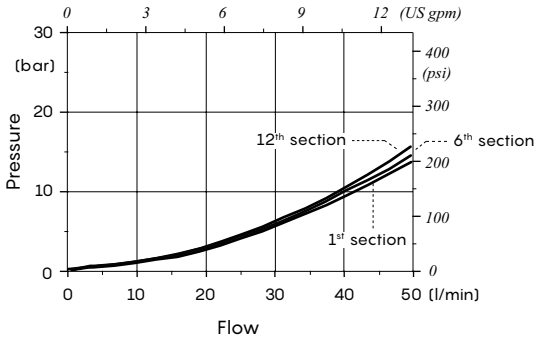

Hydraulic cuircuit

Configuration example with mechanical and hydraulic controls

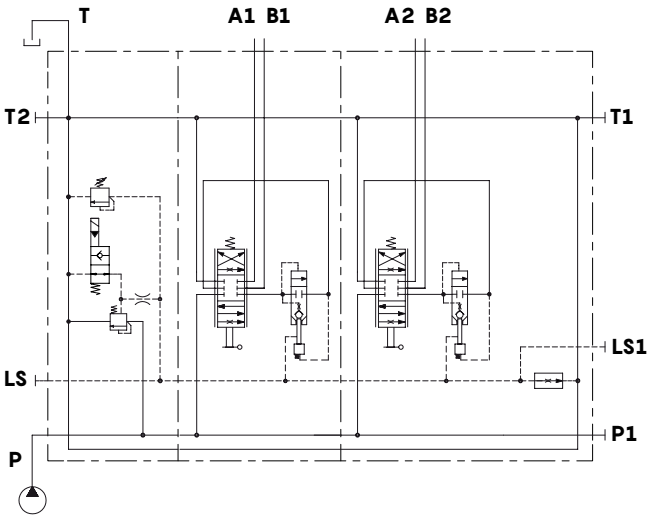

Open center circuit and lever control, with unloader valve, without port valve arrangement

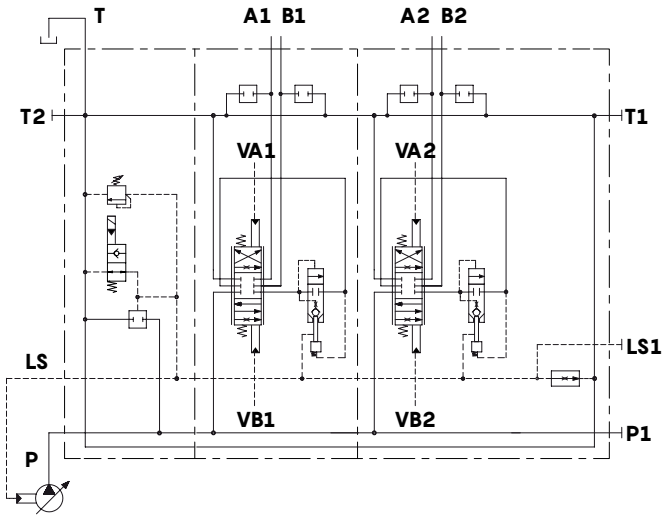

Closed center circuit and proportional hydraulic control, with unloader valve and port valve arrangement

Configuration example with electrohydraulic controls

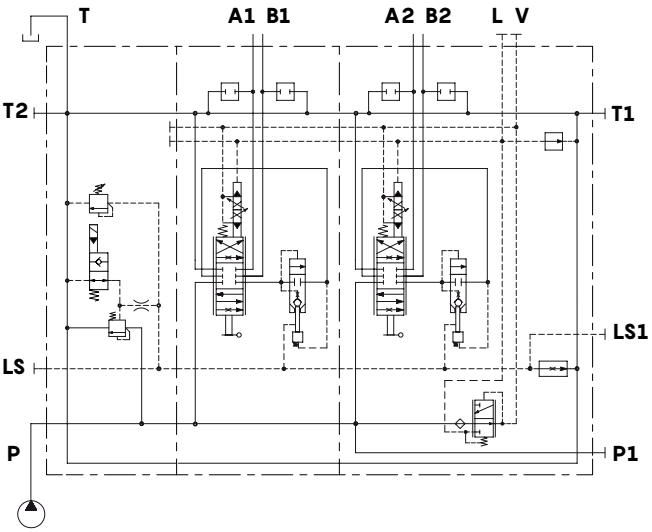

Open center circuit and one-side proportional electrohydraulic control with lever, unloader valve, port valve arrangement and pressure reducing valve, internal pilot and drain

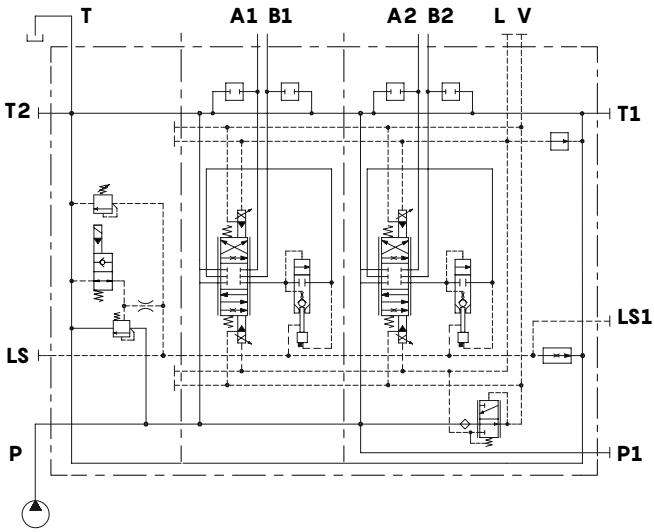

Open center circuit and two-side proportional electrohydraulic control, with unloader valve and port valve arrangement and pressure reducing valve, internal pilot and drain

Guide to configuration

Pressure peak reduction

Pressure peaks may occur in a port during normal machine operation, causing signal L.S. swings. If those pressure swings reach the inlet section or the pump compensators, they could cause an harsh and not confortable regulation, especially if they occur with high frequency.
The DPX Series directional valves, open and closed center ones, are available with inlet sections equipped with devices for L.S. signal peak reduction.

Standard configuration
Bidirectional restrictor on L.S. signal; it dampens the pressure peaks from L.S. line to inlet section compensator and vice versa.
SU option
Unidirectional restrictor on L.S. signal; it dampens the pressure peaks from L.S. line (and then from users) to inlet section compensator. It's recommended for applications that need soft start.
SO options
Unidirectional restrictor on L.S. signal; it dampens the pressure peaks from inlet section compensator to L.S. line. It's recommended for swings reduction occurred during normal operation.

Directional valve with Low Leak working sections

The DPX050 directional valve can be configured with working sections fitted with a Low Leak valve, and it can be used in all applications that require reduced leakage, such as: Tractors, Boom Mowers, Backhoe Loaders, Graders, Mini-excavator, Compact Wheel Loaders, Fork Lifts.
The working sections have the following features:
- Dedicated cast iron body to integrate hydraulic pilot Low Leak valves
- Port valves arrangement
- Capability to integrate the floating circuit with hydraulic release of the Low Leak valve
- They are configurable with standard cointrols: mechanical, proportional hydraulic and electrohydraulic
- Dedicated spools to Low Leak function.
- Compatible with inlet and outlet sections in the catalogue.

Valve with mechanical or hydraulic controls

The Low Leak working sections can be assembledin any point of the valve between the inlet section and the working and outlet section.

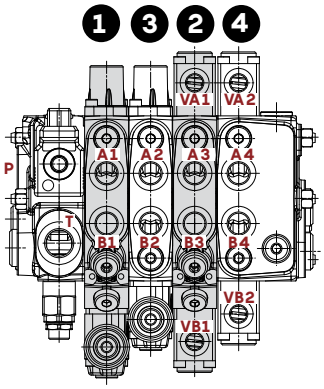

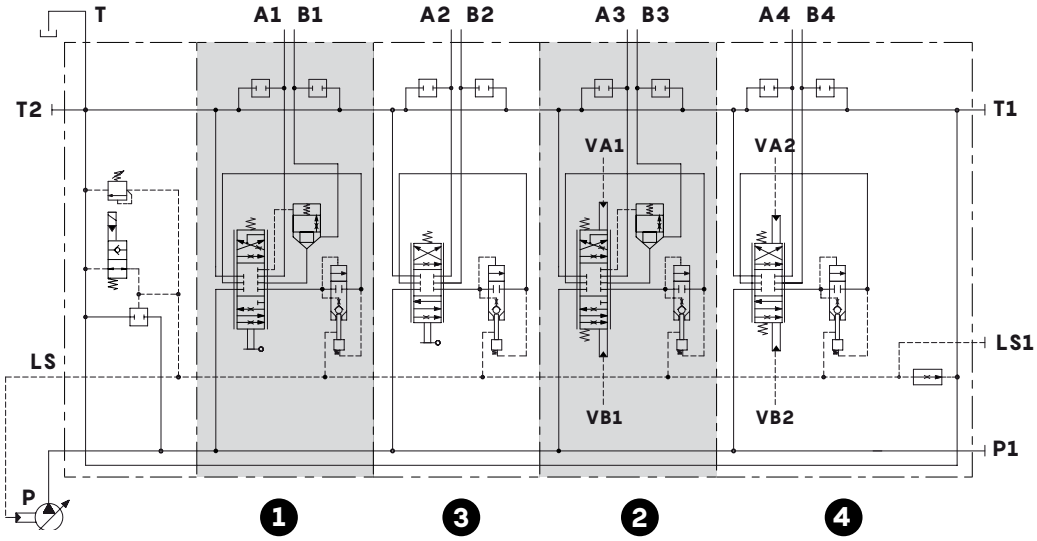

1: Low Leak working section with mechanical control
2: Low Leak working section with hydraulic control
3: Standard working section with mechanical control
4: Standard working section with hydraulic control

Guide to configuration

Directional valve with Low Leak working sections

Valve with electrohydraulic controls

The Low Leak working sections can only be fitted with one side electrohydraulic controls, and it can be assembled in any point of the valve between the inlet section and the working and outlet section..

Standard sections sections can be fitted indifferently with one-side or two-side controls, considering that the sections with two-side control must be assembled last.

Any standard section with one side electrohydraulic control assembled downstream of the Low Leak section must be without lever control.

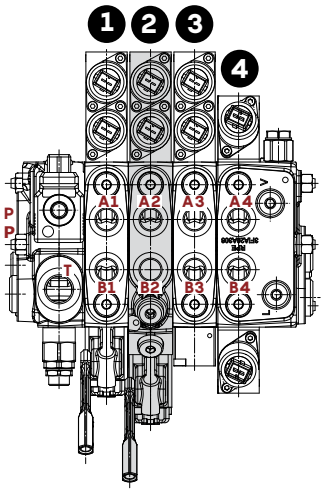

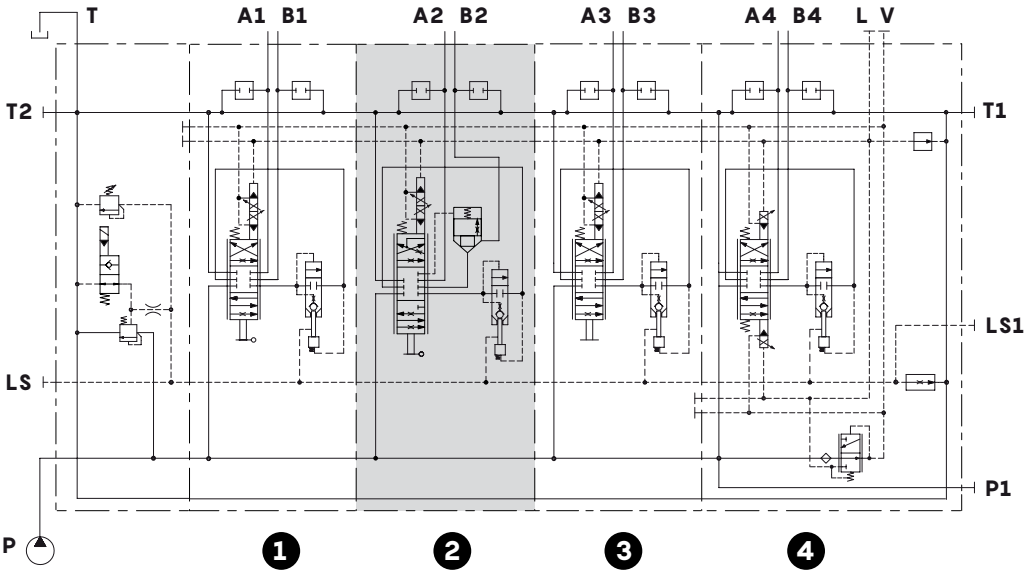

1: Standard working section with one side electrohydraulic control
2: Low Leak working section with one side electrohydraulic control
3: Standard working section with one side electrohydraulic control (without lever control on B side)
4: Standard working and outlet section with two side electrohydraulic control

Complete section ordering codes

A Mechanical or hydraulic controls configuration:

DPX050/3/AM2(TGW3-175\ELN)/Q-104(40\40)-8L/Q-I104(40\40)-8IM/RQ-104(40\40)-8L-SAE-12VDC

No. of working sections | 1 | 2 | 2 | 3 | 4 | 5

B Electrohydraulic controls configuration:

DPX050/3/AM2(TGW3-175\ELN)/QZ-I104(40\40)-8EZ3LQF3/QE-I104(40\40)-8EB3F3/RQ-1I04(40\40)-8EB3F3-SAE-12VDC

1 | 2 | 2 | 3 | 4 | 5

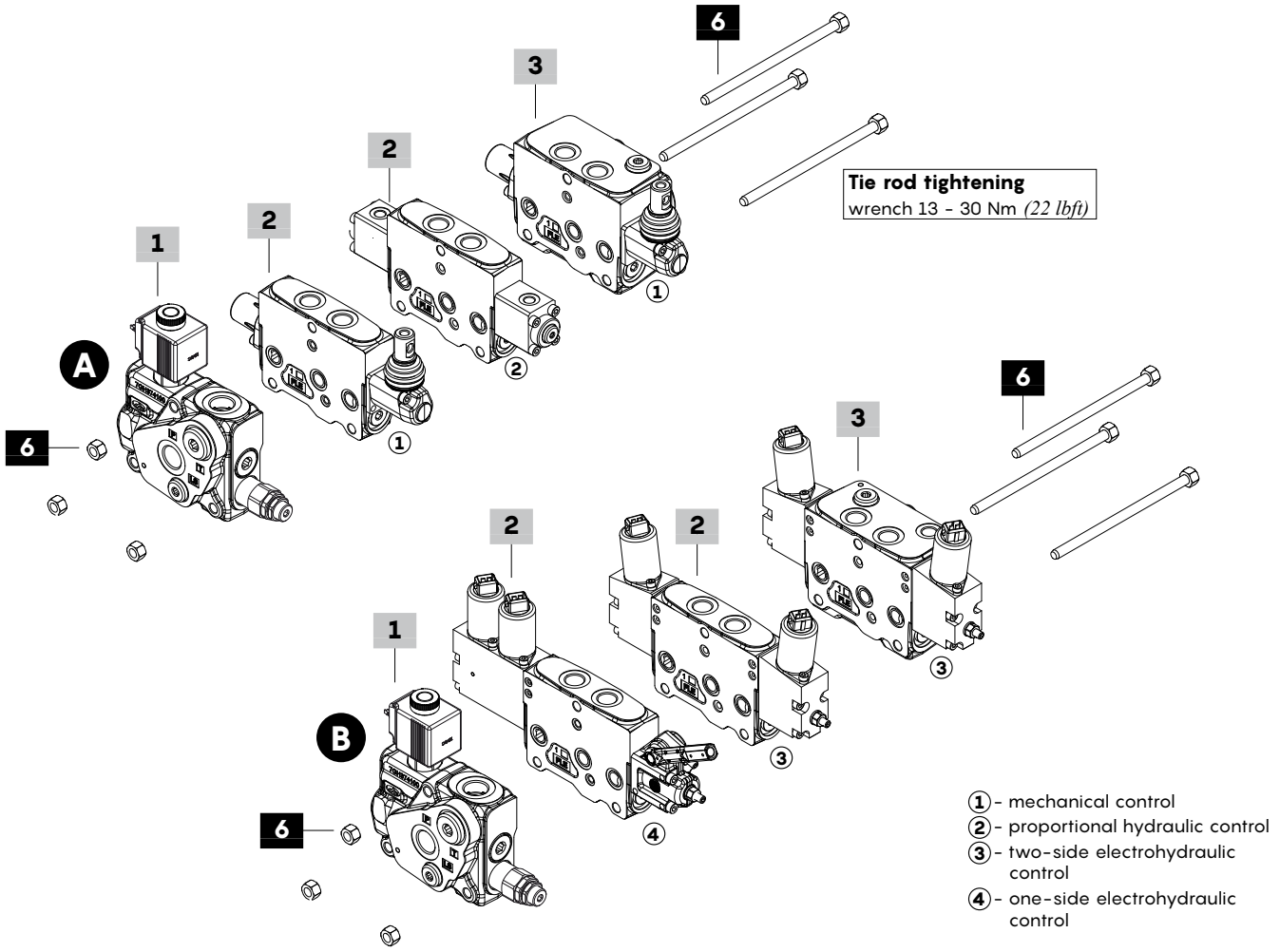

Complete section ordering codes

1 Complete inlet section *

Open Center circuit
TYPE: **DPX050/AM2(TGW3-175\ELN4)-SAE-12VDC**
CODE: 660205011S
DESCRIPTION: With compensator, pressure relief valve and unloader valve, with P-T-T2-LS ports (T2-LS plugged)
TYPE: **DPX050/AM2(SO\TGW3-195\ELP4)-SAE-12VDC**
CODE: 660205009S
DESCRIPTION: As previous one with non-return flow limiter from inlet section to working section and by-pass valve
TYPE: **DPX050/AM2(SU\TGW3-195\ELN)-SAE-12VDC**
CODE: 660205021S
DESCRIPTION: With non-return flow limiter from working section to inlet section and by-pass valve
Closed Center circuit
TYPE: **DPX050/AN2(TGW3-175\ELN)-SAE-12VDC**
CODE: 660205003S
DESCRIPTION: Without compensator, with pressure relief valve and unloader valve, with P-T-T2-LS ports (T2 plugged)
TYPE: **DPX050/AN2(SO\TGW3-175\ELN)-SAE-12VDC**
CODE: 660205005S
DESCRIPTION: As previous one with non-return flow limiter from inlet section to working section and by-pass valve
TYPE: **DPX050/AN2(SU\TGW3-175\ELN)-SAE-12VDC**
CODE: 660205004S
DESCRIPTION: With non-return flow limiter from working section to inlet section and by-pass valve

2 Complete working section *

Mechanical control
TYPE: **DPX050/Q-104(40\40)-8L-SAE**
CODE: 660155001S
DESCRIPTION: Lever control without port valves arrangement
TYPE: **DPX050/P-104(40\40)-8L.U3T-SAE**
CODE: 660105005S
DESCRIPTION: As previous one with port valve arrangement
Proportional hydraulic control
TYPE: **DPX050/Q-I104(40\40)-8IM-SAE-FPM**
CODE: 660115002V
DESCRIPTION: Without port valve arrangement
TYPE: **DPX050/P-I104(40\40)-8IM.U3T-SAE**
CODE: 660105006S
DESCRIPTION: With port valve arrangement
Two-side proportional electrohydraulic control
TYPE: **DPX050/QE-I104(40\40)-8EB3F3-12VDC-SAE-FPM**
CODE: 660115003V
DESCRIPTION: With spool stroke limiter, without port valve arrangement
TYPE: **DPX050/PE-I104(40\40)-8EB3F3.U3T-SAE-12VDC**
CODE: 660105010S
DESCRIPTION: As previous one with port valve arrangement
One-side proportional electrohydraulic control
TYPE: **DPX050/QZ-I104(40\40)-8EZ3LQF3-SAE-12VDC**
CODE: 660105007S
DESCRIPTION: With lever and spool stroke limiter, without port valve arrangement
TYPE: **DPX050/PZ-I104(40\40)-8EZ3LQF3.U3T-SAE-12VDC**
CODE: 660105008S
DESCRIPTION: As previous with port valve arrangement

3 Complete working section with outlet *

Mechanical control
TYPE: **DPX050/RQ-104(40\40)-8L-SAE**
CODE: 660305001S
DESCRIPTION: Lever control, with bleed valve and P1-T1-LS1 side ports (plugged), without port valve arrangement
TYPE: **DPX050/RP-104(40\40)-8L.U3T-SAE**
CODE: 660305002S
DESCRIPTION: As previous with port valve arrangement
Proportional hydraulic control
TYPE: **DPX050/RQ-I104(40\40)-8IM-SAE**
CODE: 660305011S
DESCRIPTION: With bleed valve and P1-T1-LS1 side ports (plugged), without port valve arrangement
TYPE: **DPX050/RP-I104(40\40)-8IM.U3T-SAE**
CODE: 660305012S
DESCRIPTION: As previous one with port valve arrangement
Two-side proportional electrohydraulic control
TYPE: **DPX050/RQE-I104(40\40)-8EB3F3-SAE-12VDC**
CODE: 660305005S
DESCRIPTION: With spool stroke limiter, bleed valve, pressure reducing valve and P1-T1-LS1 side ports (plugged), V pilot and L drain ports plugged, without port valve arrangement
TYPE: **DPX050/RPER-I104(40\40)-8EB3F3.U3T-SAE-12VDC**
CODE: 660305006S
DESCRIPTION: As previous one with port valve arrangement
One-side proportional electrohydraulic control
TYPE: **DPX050/RQZ-I104(40\40)-8EZ3LQF3-SAE-12VDC**
CODE: 660305013S
DESCRIPTION: With lever and spool stroke limiter, bleed valve, pressure reducing valve and P1-T1-LS1 side ports (plugged), V pilot and L drain ports plugged, without port valve arrangement
TYPE: **DPX050/RPZ-I104(40\40)-8EZ3LQF3.U3T-SAE-12VDC**
CODE: 660305014S
DESCRIPTION: As previous one with port valve arrangement

4 Valve threading

Only specify if it is different from BSP standard (see page 7).

5 Voltage

Specify the voltage of electric devices.

6 Assembling kit

CODE	DESCRIPTION	CODE	DESCRIPTION
5TIR108125	For 1 section valve	5TIR108320	For 7 sections valve
5TIR108157	For 2 sections valve	5TIR108349	For 8 sections valve
5TIR108192	For 3 sections valve	5TIR108381	For 9 sections valve
5TIR108222	For 4 sections valve	5TIR108413	For 10 sections valve
5TIR108253	For 5 sections valve	5TIR108446	For 11 sections valve
5TIR108285	For 6 sections valve	5TIR108477	For 12 sections valve

NOTE (*): Codes are referred to **UN-UNF** thread.

Inlet section part ordering codes

Valve setting (bar)

DPX050 / A M2 (TGW3 - 175 \ ELN) -SAE - 12VDC

1 2 3 4 5

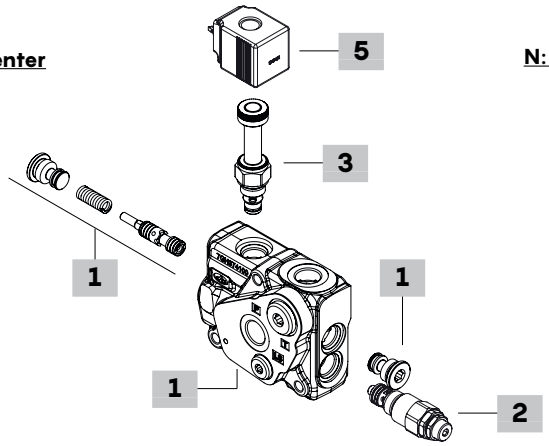

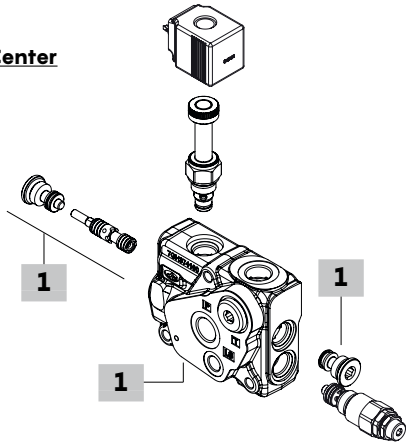

1 Inlet section kit * page 17

Open Center circuit

TYPE: **DPX050/AM2-SAE/EL** CODE: 5FIA150740S
DESCRIPTION: With P-T-T2-LS ports (T2-LS plugged) arranged for unloader valve

TYPE: **DPX050/AM2(SU)-SAE/EL** CODE: 5FIA150730S
DESCRIPTION: As previous one with non return flow limiter from working section to inlet section and by-pass valve

TYPE: **DPX050/AM2(SO)-SAE/EL** CODE:5FIA150731S
DESCRIPTION: As AM2 type with non return flow limiter from inlet section to working section and by-pass valve

Closed Center circuit

TYPE: **DPX050/AN2-SAE/EL** CODE: 5FIA150741S
DESCRIPTION: With P-T-T2-LS ports, arranged for unloader valve (T2 plugged)

TYPE: **DPX050/AN2(SU)-SAE/EL** CODE: 5FIA150732S
DESCRIPTION: As previous one with non return flow limiter from working section to inlet section and by-pass valve

TYPE: **DPX050/AN2(SO)-SAE/EL** CODE: 5FIA150733S
DESCRIPTION: As AN2 type with non return flow limiter from inlet section to working section and by-pass valve

2 Main pressure relief valve page 19

Valves standard setting is referred to 5 l/min *(1.3 US gpm)* flow.

TYPE	CODE	DESCRIPTION
(TGW2-80)	0MC09002000	Range 10-120 bar *(145-1750 psi)* std setting 80 bar *(1160 psi)*
(TGW3-175)	0MC09002001	Range 40-220 bar *(580-3200 psi)* std setting 175 bar *(2550 psi)*
(TGW4-250)	0MC09002002	Range 200-350 bar *(2900-5100 psi)* std setting 250 bar *(3600 psi)*
SV	XTAP524340D	Relief valve blanking plug

3 Solenoid operated unloading valve page 19

TYPE	CODE	DESCRIPTION
ELN	0EF08002000	Without emergency override
ELV	0EF08002003	With screw type emergency override
ELP	0EF08002002	With push-button emergency override
ELT	0EF08002004	With "twist & push" emergency override
LT	XTAP510320	Unloading valve blanking plug

4 Section threading

Only specify if it is different from BSP standard (see page 7).

5 Coil

TYPE	CODE	DESCRIPTION
12VDC	4SLE001200A	12VDC coil type **BER**, ISO4400 connector

For complete available coil list see page 160.

NOTE (*): Codes are referred to **UN-UNF** thread.

Inlet section

Dimensions and hydraulic circuit

Example of M type Open Center section

Type AM2

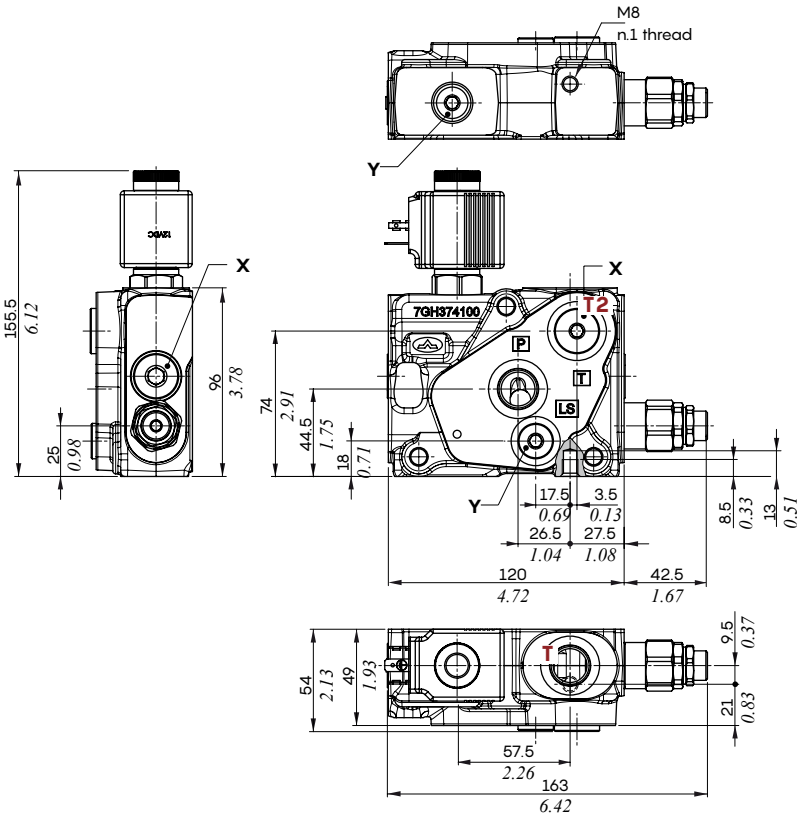

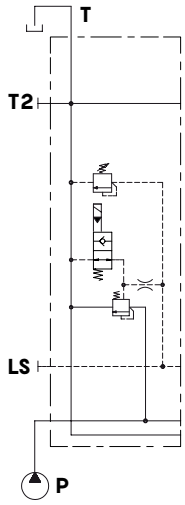

Wrenches and tightening torques

X = allen wrench 8 - 24 Nm *(17.7 lbft)*
Y = allen wrench 6 - 24 Nm *(17.7 lbft)*
Z = allen wrench 5 - 9.8 Nm *(7.2 lbft)*
NOTE: for valves wrench and torque see related pages

Type AM2(SO) or AM2(SU)

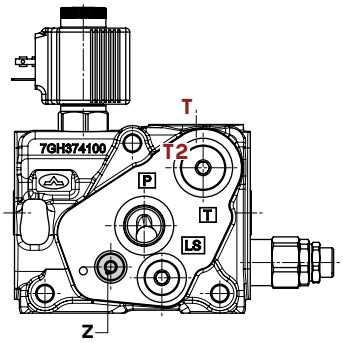

Type AM2(SU)

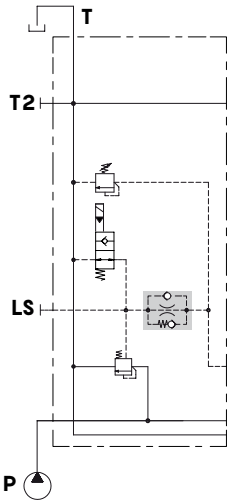

Type AM2(SO)

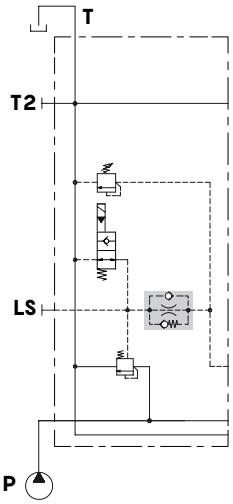

Inlet section

Dimensions and hydraulic circuit

Example of N type Closed Center section

Type AN2

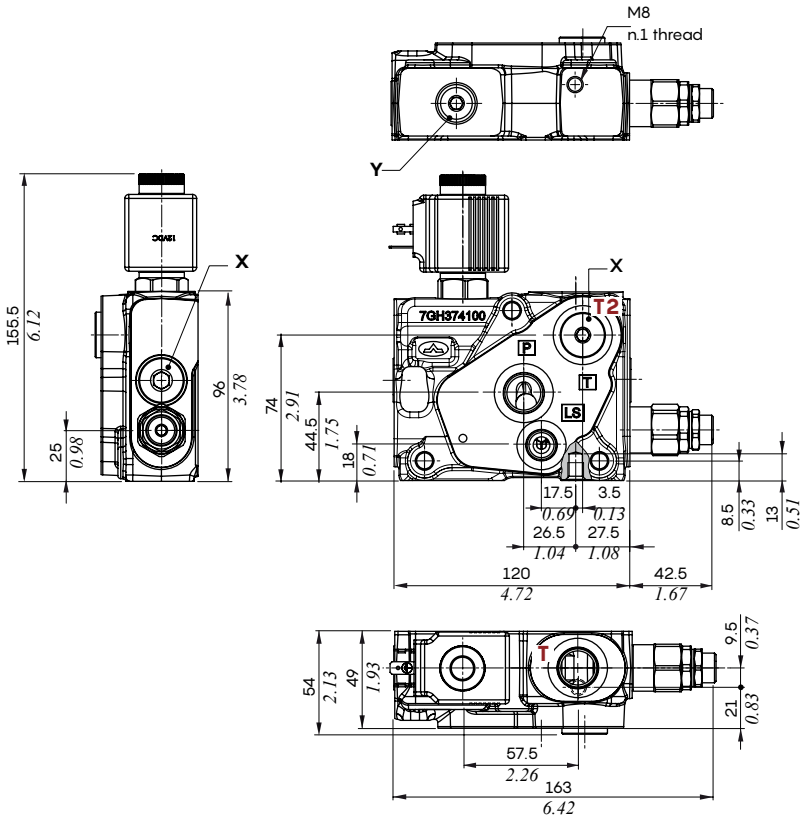

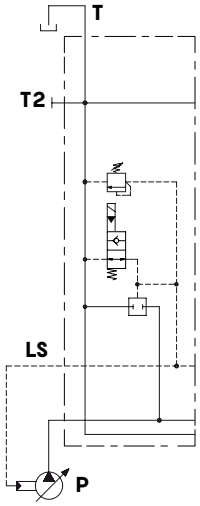

Wrenches and tightening torques

X = allen wrench 8 - 24 Nm *(17.7 lbft)*
Y = allen wrench 6 - 24 Nm *(17.7 lbft)*
Z = allen wrench 5 - 9.8 Nm *(7.2 lbft)*
NOTE: for valves wrench and torque see related pages

Type AN2(SO) or AN2(SU)

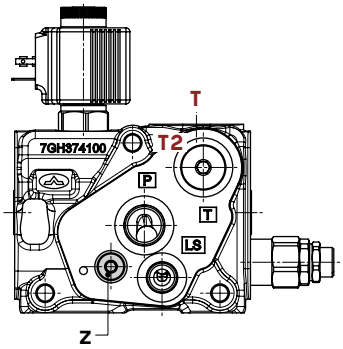

Type AN2(SU)

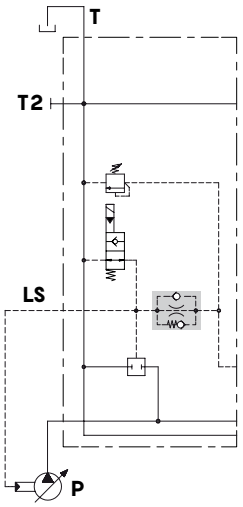

Type AN2(SO)

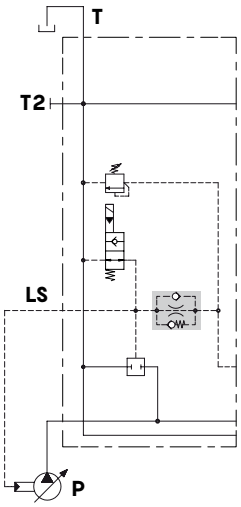

Main pressure relief valve

Setting types

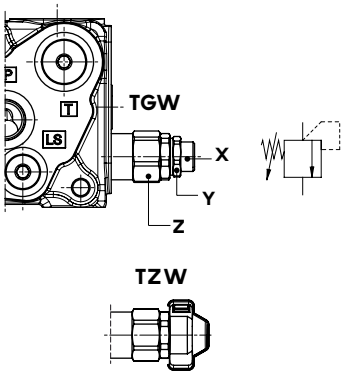

Setting range: type TGW2

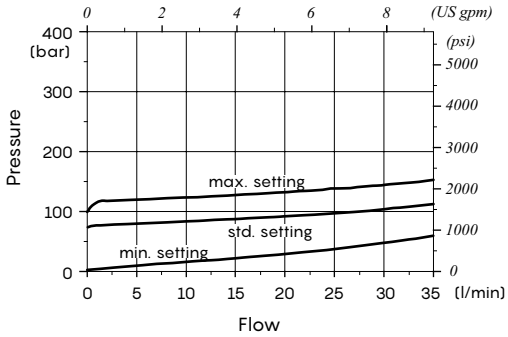

Setting range: type TGW3

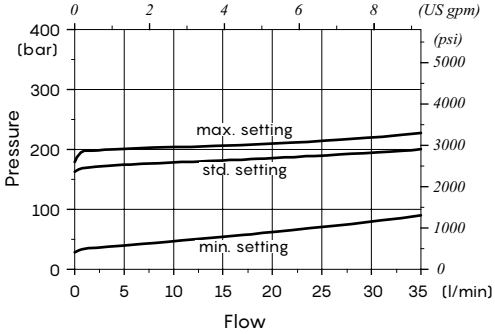

Setting range: type TGW4

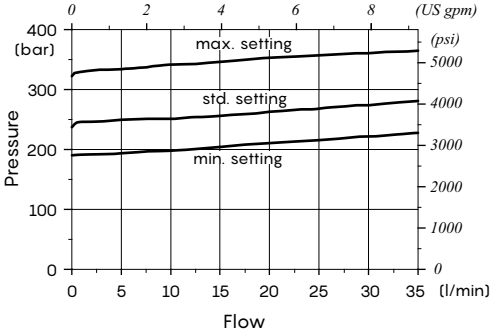

Legenda
TGW: free setting
TZW: valve set and locked
(cap code 4COP126301, n.2 pcs)
RAL3003 pigmented

Wrenches and tightening torques
X = allen wrench 5
Y = wrench 19 - 20 Nm *(14.7 lbft)*
Z = wrench 24 - 42 Nm *(31 lbft)*

Solenoid operated unloading valve

Manual emergency types

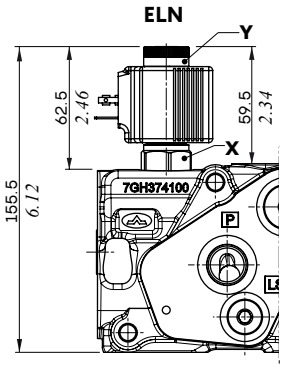

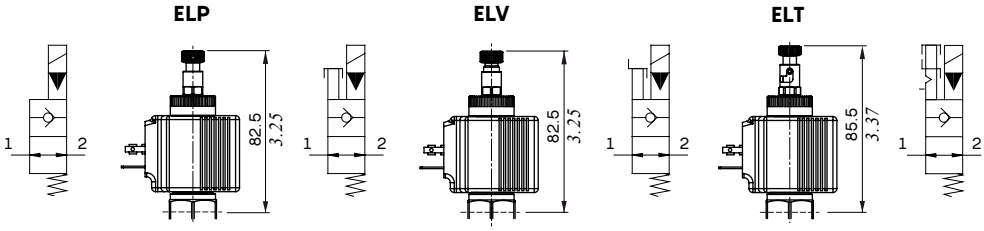

Legenda
ELN: without emergency
ELP: push button emergency override
ELV: screw emergency override
ELT: "push&twist" emergency override

Wrenches and tightening torques
X = wrench 24 - 30 Nm *(22 lbft)*
Y = manual tightening

Features
Max. flow. . . . . : 40 l/min *(10.6 US gpm)*
Max. pressure . . . . . : 380 bar *(5500 psi)*
Internal leakage . . . . . : 0.25 cm^3/min @ 210 bar
(0.015 in^3/min @ 3050 psi)

For coil features and options see **BER** type coil at page 160.

Working and outlet section part ordering codes (mechanical and hydraulic)

A Mechanical control configuration (section):

Flow on A/B ports (l/min)

Valve setting (bar) A port B port

DPX050 / P - 104(40\40) - 8 L . U1(100) U2(120) - ....

1 3 4 5 7 8

B Prop. hydraulic control configuration (section):

DPX050 / Q - I104(40\40) - 8IM - ....

1 3 6 8

C Mechanical control configuration (outlet section):

DPX050 / RP - 104(40\40) - 8 L . U3T- ....

2 3 4 5 7 8

D Prop. hydraulic control configuration (outlet section):

DPX050 / RQ - I104(40\40) - 8IM (VBT) - F1- ....

2 3 6 2.1 2.2 8

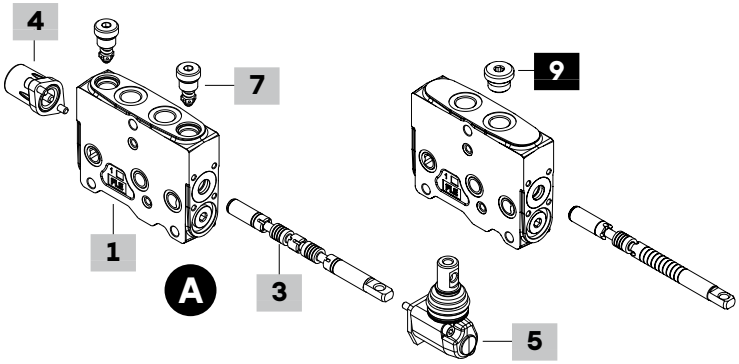

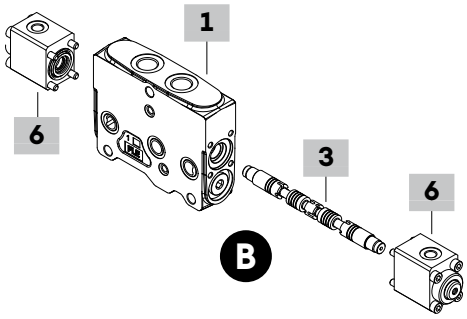

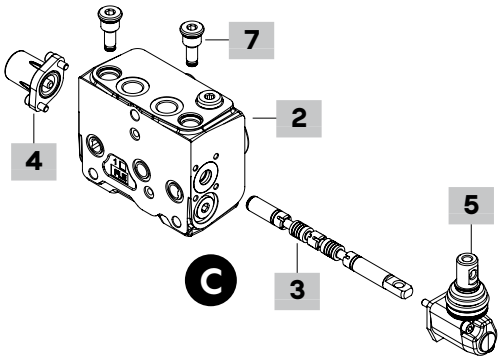

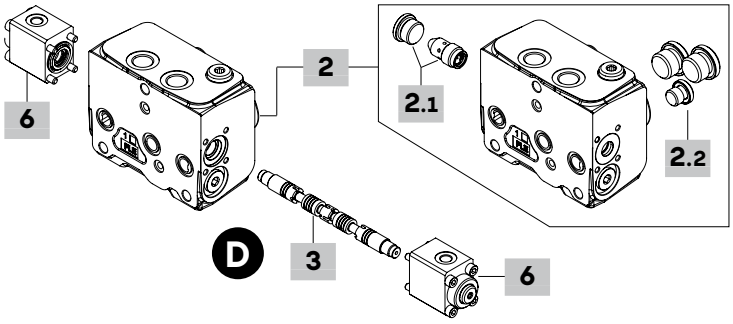

1 Working section kit * page 24

For mechanical control

TYPE: **DPX050/Q-SAE-FPM** CODE: 5EL10A7010V
DESCRIPTION: Without port valve arrangement
TYPE: **DPX050/P-SAE-FPM** CODE: 5EL10A7000V
DESCRIPTION: With port valve arrangement

For proportional hydraulic control

TYPE: **DPX050/Q-IM-SAE-FPM** CODE: 5EL10A7010AV
DESCRIPTION: Without port valve arrangement
TYPE: **DPX050/P-IM-SAE-FPM** CODE: 5EL10A7000AV
DESCRIPTION: With port valve arrangement

2 Working section kit with outlet * page 25

For mechanical control

TYPE: **DPX050/RQ-SAE** CODE: 5FIA20A710S
DESCRIPTION: With bleed valve, with P1-T1-LS1 port plugged, without port valve arrangement
TYPE: **DPX050/RP-SAE** CODE: 5FIA20A700S
DESCRIPTION: As previous one with port valve arrangement

For proportional hydraulic control

TYPE: **DPX050/RQ-IM-SAE** CODE: 5FIA20A710AS
DESCRIPTION: With bleed valve, with P1-T1-LS1 port plugged, without port valve arrangement
TYPE: **DPX050/RP-IM-SAE** CODE: 5FIA20A700AS
DESCRIPTION: As previous one with port valve arrangement

NOTE (*): Codes are referred to **UN-UNF** thread.

Working and outlet section part ordering codes (mechanical and hydraulic)

2.1 Bleed valve page 26

TYPE	CODE	DESCRIPTION
(-)	X138850000	Bleed valve
(VBT)	4TAP416810	Valve blanking plug
Both options need cavity plug:		
	3XTAP822151	SAE8 plug, nr.1

2.2 Parts *

TYPE	CODE	DESCRIPTION
P1-T1-LS1 plugged ports		
-	XTAP822150	SAE8 plug, nr.2
	3XTAP817130	SAE6 plug, nr.1
P1-T1 plugged ports, LS1 open		
F1	3XTAP822150	SAE8 plug, nr.2

3 Spool page 27

Flow is referred to 14 bar *(200 psi)* stand-by (margin pressure)

TYPE	CODE	DESCRIPTION
For mechanical control		
Double acting with A and B closed in neutral position, floating circuit with 13RZ type positioner (4 position)		
105(50)	3CUA110005	50 l/min *(13 US gpm)* flow
104(40)	3CUA110004	40 l/min *(10.5 US gpm)* flow
103(30)	3CUA110003	30 l/min *(7.9 US gpm)* flow
102(20)	3CUA110002	20 l/min *(5.3 US gpm)* flow
101(10)	3CUA110001	10 l/min *(2.6 US gpm)* flow
106(5)	3CUA110006	5 l/min *(1.3 US gpm)* flow
Double acting with A and B to tank in neutral position		
202(20)	3CUA123002	20 l/min *(5.3 US gpm)* flow
201(10)	3CUA123001	10 l/min *(2.6 US gpm)* flow
Double acting with A and B partially to tank in neutral position		
2H05(50)	3CUA124005	50 l/min *(13 US gpm)* flow
2H04(40)	3CUA124004	40 l/min *(10.5 US gpm)* flow
2H03(30)	3CUA124003	30 l/min *(7.9 US gpm)* flow
2H02(20)	3CUA124002	20 l/min *(5.3 US gpm)* flow
2H01(10)	3CUA124001	10 l/min *(2.6 US gpm)* flow
2H06(5)	3CUA124006	5 l/min *(1.3 US gpm)* flow
Single acting on A, B plugged: SAE6 plug is required		
305(50)	3CUA131005	50 l/min *(13 US gpm)* flow
302(20)	3CUA131002	20 l/min *(5.3 US gpm)* flow
For proportional hydraulic control		
Double acting with A and B closed in neutral position, floating circuit with 4 positions 13IMP type control		
I105(50)	3CUA310005	50 l/min *(13 US gpm)* flow
I104(40)	3CUA310004	40 l/min *(10.5 US gpm)* flow
I103(30)	3CUA310003	30 l/min *(7.9 US gpm)* flow
I102(20)	3CUA310002	20 l/min *(5.3 US gpm)* flow
I101(10)	3CUA310001	10 l/min *(2.6 US gpm)* flow
I106(5)	3CUA310006	5 l/min *(1.3 US gpm)* flow
Double acting with A and B to tank in neutral position		
I204(40)	3CUA325004	40 l/min *(10.5 US gpm)* flow
I203(30)	3CUA325003	30 l/min *(7.9 US gpm)* flow
I202(20)	3CUA325002	20 l/min *(5.3 US gpm)* flow
I201(10)	3CUA325001	10 l/min *(2.6 US gpm)* flow
I206(5)	3CUA325006	5 l/min *(1.3 US gpm)* flow
Double acting with A and B partially to tank in neutral position		
I2H05(50)	3CUA324005	50 l/min *(13 US gpm)* flow
I2H04(40)	3CUA324004	40 l/min *(10.5 US gpm)* flow
I2H08(30)	3CUA324008	30 l/min *(7.9 US gpm)* flow
I2H07(20)	3CUA324007	20 l/min *(5.3 US gpm)* flow
I2H01(10)	3CUA324001	10 l/min *(2.6 US gpm)* flow
I2H06(5)	3CUA324006	5 l/min *(1.3 US gpm)* flow
Single acting on A or B, other port plugged: SAE6 plug is required		
I305-I405(50)	3CUA331005	50 l/min *(13 US gpm)* flow
I302-I402(20)	3CUA331002	20 l/min *(5.3 US gpm)* flow

4 "A" side spool positioners page 29

TYPE	CODE	DESCRIPTION
7FT	5V0710A001	With friction and neutral position notch
8	5V08102000	3 pos. with spring return to neutral position
8F2	5V0810A001	Spool stroke limiter on B port
8D	5V08102200	External pin with M6 female thread
8D2	5V08102220	External pin with M8 male thread
9BZ	5V09202010	Detent in position 1
10BZ	5V10202010	Detent in position 2
11BZ	5V11202010	Detent in positions 1 and 2
12	5V12102000	2 positions, detent in pos. 1 and 2
For floating circuit (standard spool)		
13RZ	5V13306020	4 pos., detent in 4th position with spool in, spring return to neutral position

5 "B" side spool control kit page 31

TYPE	CODE	DESCRIPTION
L	5LEV10A000	Standard lever box
LF1	5LEV10A001	As L type, with spool stroke limiter on A port
SLP	5COP150000	Without lever with dust-proof plate
TQ	5TEL10A100	Flexible cable connection

6 Proportional hydraulic control * page 32

TYPE	CODE	DESCRIPTION
8IM-SAE	5IDR20A700AV	Range 8-27 bar *(116-392 psi)*
8IMX-SAE	5IDR20A701AV	Range 3.5-20 bar *(51-290 psi)*
8IMF3-SAE	5IDR20A702AV	Range 8-27 bar *(116-392 psi)*, with spool stroke limiter on A and B ports
8IMXF3-SAE	5IDR20A703AV	Range 3.5-20 bar *(51-290 psi)*, with spool stroke limiter on A and B ports
For floating circuit (standard spool)		
13IMP-SAE	5IDR20A710V	Range 4-16.5-28 bar *(58-239-406 psi)*

7 Port valves page 40

TYPE	CODE	DESCRIPTION
UT	XTAP518370V	Valve blanking plug
C	5KIT411000	Anticavitation valve

Fixed setting antishock and anticavitation valves: setting is referred to 10 l/min *(2.6 US gpm)*

TYPE: **U 100** (└ setting (bar)) CODE: 5KIT308 100 (└ setting (bar))

SETTING:

40 bar *(580 psi)*	50 bar *(725 psi)*	63 bar *(870 psi)*
80 bar *(1150 psi)*	100 bar *(1450 psi)*	120 bar *(1750 psi)*
130 bar *(1900 psi)*	140 bar *(2050 psi)*	150 bar *(2150 psi)*
165 bar *(2400 psi)*	175 bar *(2550 psi)*	185 bar *(2700 psi)*
200 bar *(2900 psi)*	210 bar *(3050 psi)*	220 bar *(3200 psi)*
235 bar *(3400 psi)*	250 bar *(3600 psi)*	270 bar *(3900 psi)*
300 bar *(4350 psi)*	340 bar *(4950 psi)*	

8 Section threading

Only specify if it is different from **BSP** standard (see page 7).

9 Plug for single acting spool *

CODE	DESCRIPTION
3XTAP817130	SAE6 plug

NOTE (*): Codes are referred to **UN-UNF** thread.
NOTE (-): "Type" omitted in section description

Working and outlet section part ordering codes (electrohydraulic)

A One-side electrohydraulic control configuration (section):

flow on A/B ports (l/min) — Valve setting (bar) A port, B port

DPX050 / PZ - I104(40\40) - 8EZ3 LQF3 . U1(100) U2(120) - SAE - 12VDC

1 3 4 5 7 8 4

B Two-side electrohydraulic control configuration (section):

DPX050 / QE - I104(40\40) - 8EB3F3 - SAE - 12VDC

1 3 6 8 6

C One-side electrohydraulic control configuration (outlet section):

DPX050 / RQZ - I104(40\40) - 8EZ3 LQF3 . U3T - (VBT \ RT) - F1 - NOTAP(VL) - SAE - 12VDC

2 3 4 5 7 2.1 2.2 2.3 2.4 8 4

D Two-side electrohydraulic control configuration (outlet section):

DPX050 / RQE - I104(40\40) - 8EB3F3 - SAE - 12VDC

2 3 6 8 6

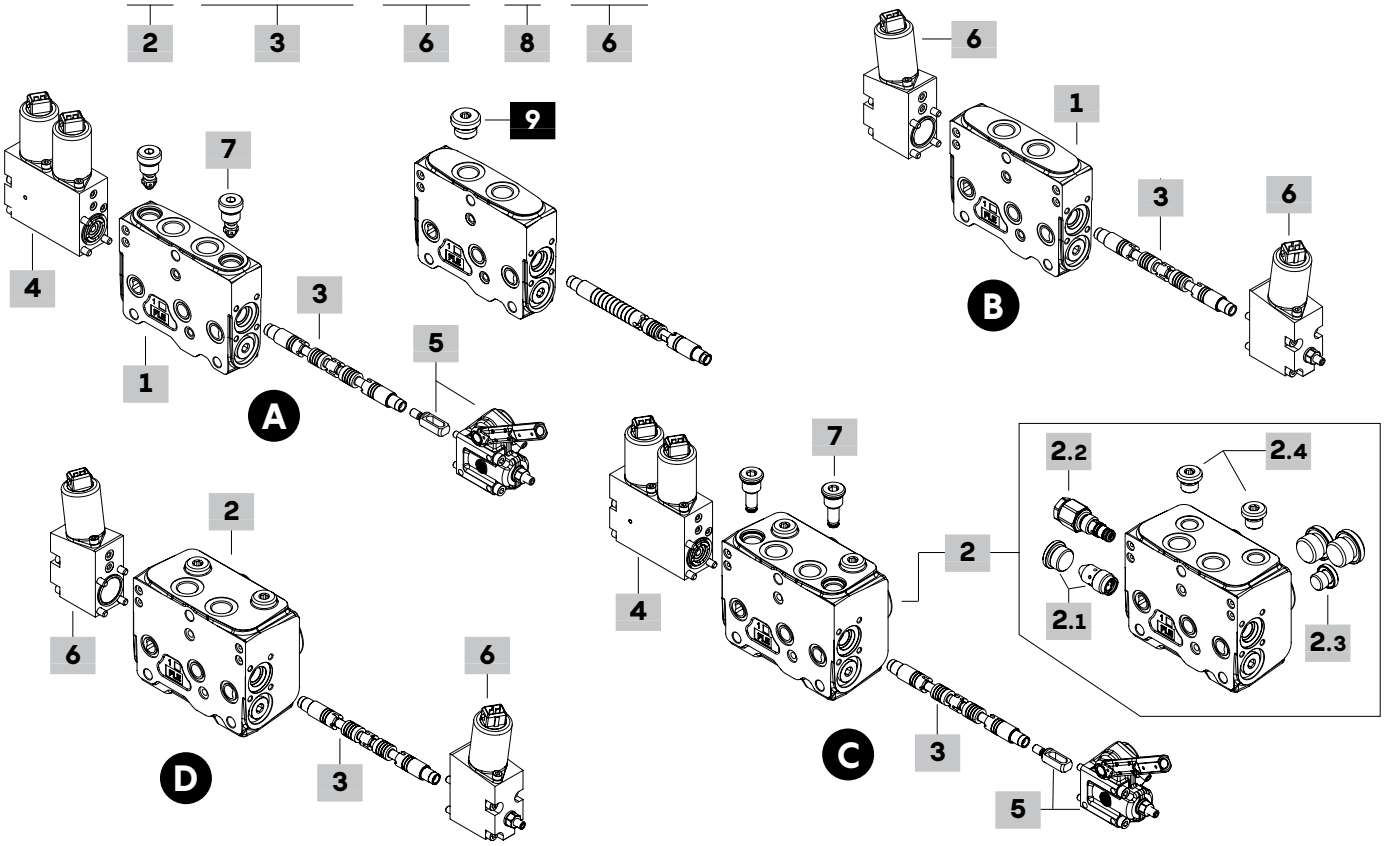

1	Working section kit *	page 24

For two-side electrohydraulic control

TYPE: **DPX050/QE-SAE-FPM** CODE: 5EL10A7012V
DESCRIPTION: Without port valve arrangement
TYPE: **DPX050/PE-SAE-FPM** CODE: 5EL10A7002V
DESCRIPTION: With port valve arrangement

1	Working section kit *	page 24

For one-side electrohydraulic control

TYPE: **DPX050/QZ-SAE-FPM** CODE: 5EL10A7210V
DESCRIPTION: Without port valve arrangement
TYPE: **DPX050/PZ-SAE-FPM** CODE: 5EL10A7200V
DESCRIPTION: With port valve arrangement

NOTE (*): Codes are referred to **UN-UNF** thread.

Working and outlet section part ordering codes (electrohydraulic)

2 Working section kit with outlet * page 25

For two-side electrohydraulic control

TYPE: **DPX050/RQE-SAE** CODE: 5FIA20A711S
DESCRIPTION: With bleed valve, with P1-T1-LS1 plugged port, without port valve arrangement
TYPE: **DPX050/RPE-SAE** CODE: 5FIA20A701S
DESCRIPTION: As previous one with port valve arrangement

For one-side electrohydraulic control

TYPE: **DPX050/RQZ-SAE** CODE: 5FIA20A721S
DESCRIPTION: With bleed valve, with P1-T1-LS1 plugged port, without port valve arrangement
TYPE: **DPX050/RPZ-SAE** CODE: 5FIA20A720S
DESCRIPTION: As previous one with port valve arrangement

2.1 Bleed valve page 26

TYPE	CODE	DESCRIPTION
(-)	X138850000	Bleed valve
(VBT)	4TAP416810	Valve blanking plug
Both options need cavity plug:		
	3XTAP822151	SAE8 plug, nr.1

2.2 Pressure reducing valve page 26

Codes are regerred to parts with **FPM** seals.

TYPE	CODE	DESCRIPTION
(-)	X219740035V	Pressure reducing valve, 30-45 bar *(435-650 psi)*
(RT)	XTAP418350V	Valve blanking plug

2.3 Parts *

TYPE	CODE	DESCRIPTION
P1-T1-LS1 plugged ports		
-	XTAP822150	SAE8 plug, nr.2
	3XTAP817130	SAE6 plug, nr.1
P1-T1 plugged ports, LS1 open		
F1	3XTAP822150	SAE8 plug, nr.2

2.4 Pilot and drain *

TYPE	CODE	DESCRIPTION
(-)	3XTAP814120	SAE4 plug, nr.1 for internal pilot
(-)	3XTAP817130	SAE6 plug, nr.1 for internal drain
NOTAP(VL)	4TAP310007	M10x1 DIN906 plug, for external drain

3 Spool page 27

Flow is referred to 14 bar *(200 psi)* stand-by (margin pressure)

TYPE	CODE	DESCRIPTION
Double acting with A and B closed in neutral position, floating circuit with 4 positions controls (13.. type)		
I105(50)	3CUA310005	50 l/min *(13 US gpm)* flow
I104(40)	3CUA310004	40 l/min *(10.5 US gpm)* flow
I103(30)	3CUA310003	30 l/min *(7.9 US gpm)* flow
I102(20)	3CUA310002	20 l/min *(5.3 US gpm)* flow
I101(10)	3CUA310001	10 l/min *(2.6 US gpm)* flow
I106(5)	3CUA310006	5 l/min *(1.3 US gpm)* flow
Double acting with A and B to tank in neutral position		
I204(40)	3CUA325004	40 l/min *(10.5 US gpm)* flow
I203(30)	3CUA325003	30 l/min *(7.9 US gpm)* flow
I202(20)	3CUA325002	20 l/min *(5.3 US gpm)* flow
I201(10)	3CUA325001	10 l/min *(2.6 US gpm)* flow
I206(5)	3CUA325006	5 l/min *(1.3 US gpm)* flow
Double acting with A and B partially to tank in neutral position		
I2H05(50)	3CUA324005	50 l/min *(13 US gpm)* flow
I2H04(40)	3CUA324004	40 l/min *(10.5 US gpm)* flow
I2H08(30)	3CUA324008	30 l/min *(7.9 US gpm)* flow
I2H07(20)	3CUA324007	20 l/min *(5.3 US gpm)* flow
I2H01(10)	3CUA324001	10 l/min *(2.6 US gpm)* flow
I2H06(5)	3CUA324006	5 l/min *(1.3 US gpm)* flow
Single acting on A or B, other port plugged: SAE6 plug is required		
I305-I405(50)	3CUA331005	50 l/min *(13 US gpm)* flow
I302-I402(20)	3CUA331002	20 l/min *(5.3 US gpm)* flow

4 One-side electrohydr.control; "A" side page 38

These controls must be coupled with "B" side options

TYPE	CODE	DESCRIPTION
8EZ3-12VDC	5V0810A780V	AMP connector
8EZ3-24VDC	5V0810A785V	As previous one
8EZ3F2-12VDC	5V0810A781V	AMP conn., spool stroke limiter
8EZ3F2-24VDC	5V0810A782V	As previous one
8EZ34-12VDC	5V0810A786V	Deutsch connector
8EZ34-24VDC	5V0810A787V	As previous one
8EZ34F2-12VDC	5V0810A783V	Deutsch conn.,spool stroke limiter
8EZ34F2-24VDC	5V0810A784V	As previous one
For floating circuit (standard spool)		
13EZ3P-12VDC	5V1310A788V	With Step, with AMP connector
13EZ3P-24VDC	5V1310A790V	As previous one
13EZ34P-12VDC	5V1310A789V	With Step, with Deutsch conn.
13EZ34P-24VDC	5V1310A791V	As previous one
With spool position sensor		
8EZ3SPSD-12VDC	5V0810A790V	AMP connector and digital sensor
8EZ3SPSD-24VDC	5V0810A791V	As previous one

5 One-side electrohydr.option; "B" side page 39

These options must be coupled with "A" side controls

TYPE	CODE	DESCRIPTION
LQ	5LEV10A005V	Lever control
LQ180	5LEV10A006V	As previous one, turned of 180°
LQF3	5LEV10A004V	As LQ, spool stroke limiter on A, B ports
LQF3180	5LEV10A003V	As previous one, turned of 180°
SLC	5COP150010V	Endcap
SLCF1	5COP150011V	Endcap with spool stroke limiter

6 Two-side electrohydraulic control page 37

TYPE	CODE	DESCRIPTION
8EB3-12VDC	5IDR90A200V	AMP connector
8EB3-24VDC	5IDR90A201V	As previous one
8EB34-12VDC	5IDR90A202V	Deutsch connector
8EB34-24VDC	5IDR90A203V	As previous one
8EB3F3-12VDC	5IDR90A204V	AMP connector, spool stroke limiter on A and B ports
8EB3F3-24VDC	5IDR90A205V	As previous one
8EB34F3-12VDC	5IDR90A206V	Deutsch onnector, spool stroke limiter on A and B ports
8EB34F3-24VDC	5IDR90A207V	As previous one
For floating circuit (standard spool)		
13EB3P-12VDC	5IDR91A208V	With Step, AMP connector
13EB3P-24VDC	5IDR91A209V	As previous one
13EB34P-12VDC	5IDR91A210V	With Step, Deutsch connector
13EB34P-24VDC	5IDR91A211V	As previous one

7 Port valves page 40

TYPE	CODE	DESCRIPTION
U040	5KIT308040	Setting: 40 bar *(580 psi)*

For complete list see previous pages.

8 Section threading

Only specify if it is different from **BSP** standard (see page 7).

9 Plug for single acting spool *

CODE	DESCRIPTION
3XTAP817130	SAE6 plug

NOTE (*): Codes are referred to **UN-UNF** thread.
NOTE (-): "Type" omitted in section description

Working and outlet section

Dimensions and hydraulic circuit

Section for mechanical and hydraulic controls

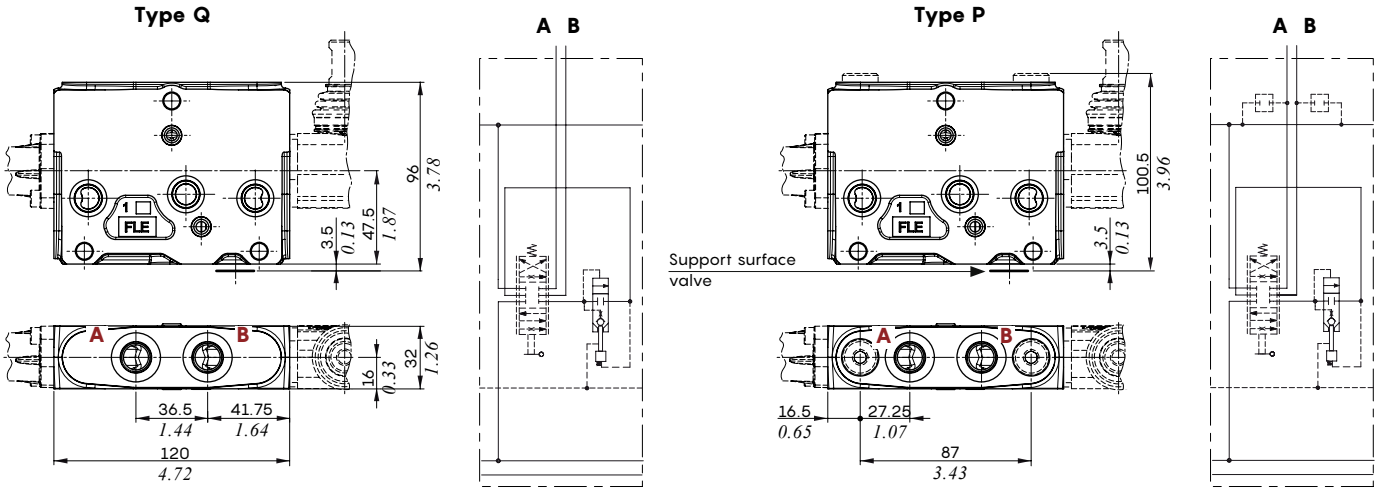

Section for electrohydraulic controls

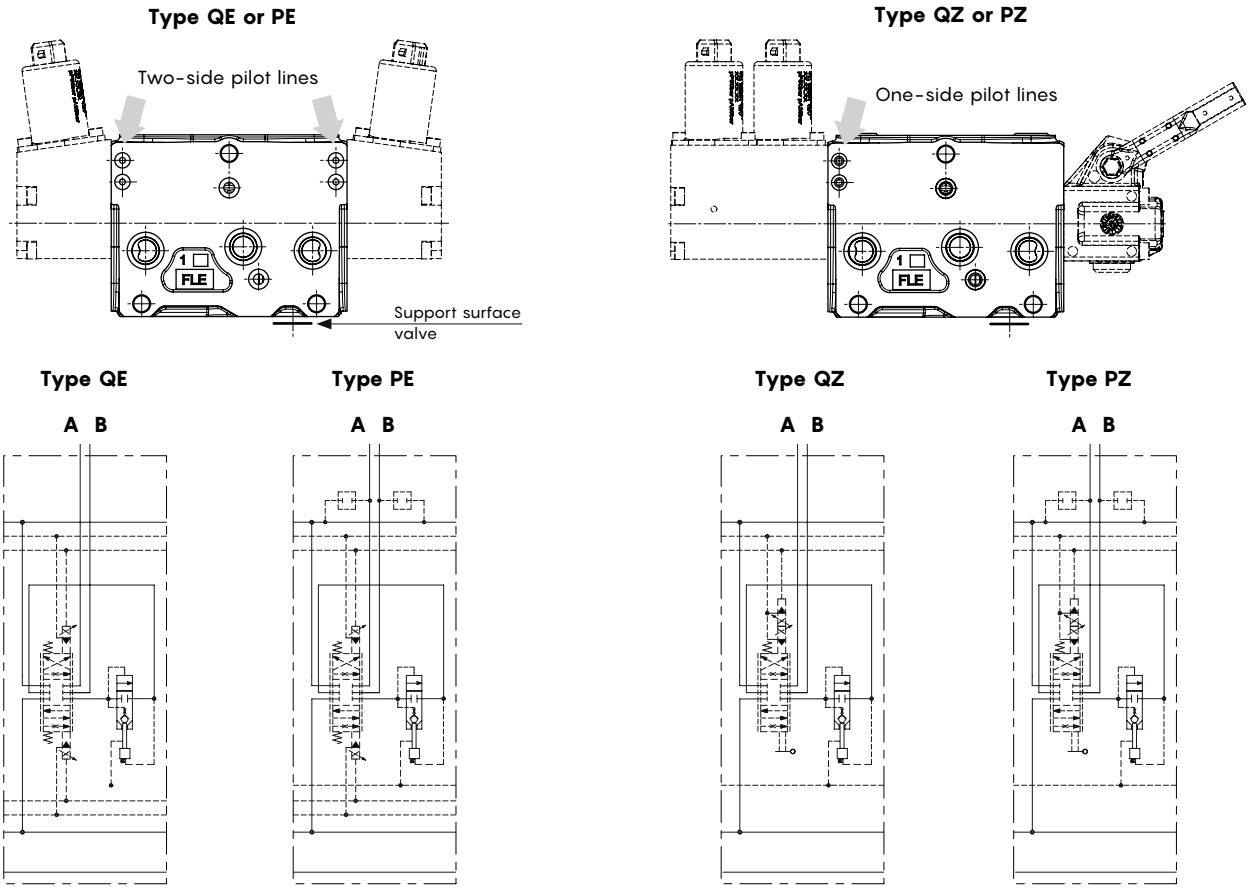

Working and outlet section

Dimensions and hydraulic circuit

Section with outlet for mechanical and hydraulic controls

Type RQ

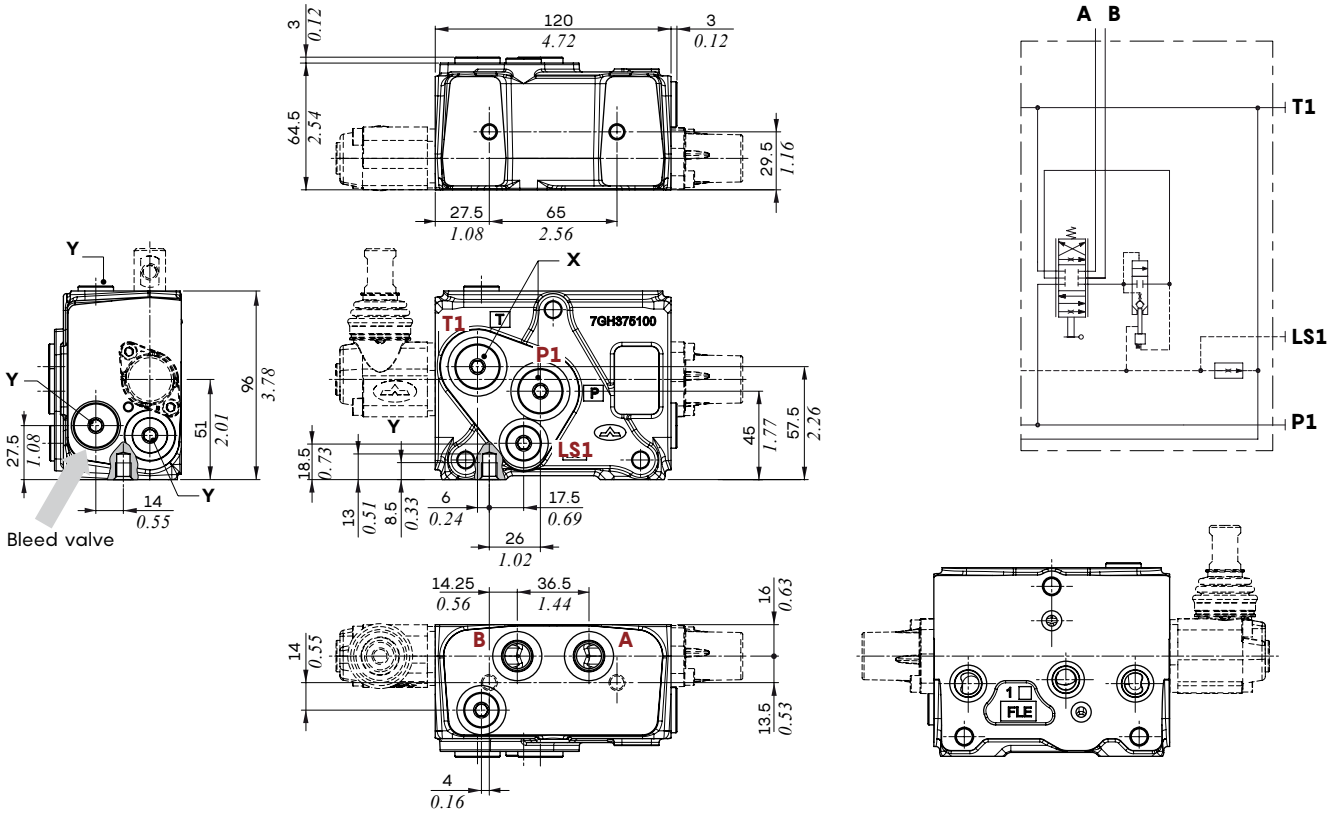

Wrenches and tightening torques

X = allen wrench 8 - 24 Nm *(17.7 lbft)*

Y = allen wrench 6 - 24 Nm *(17.7 lbft)*

Type RP

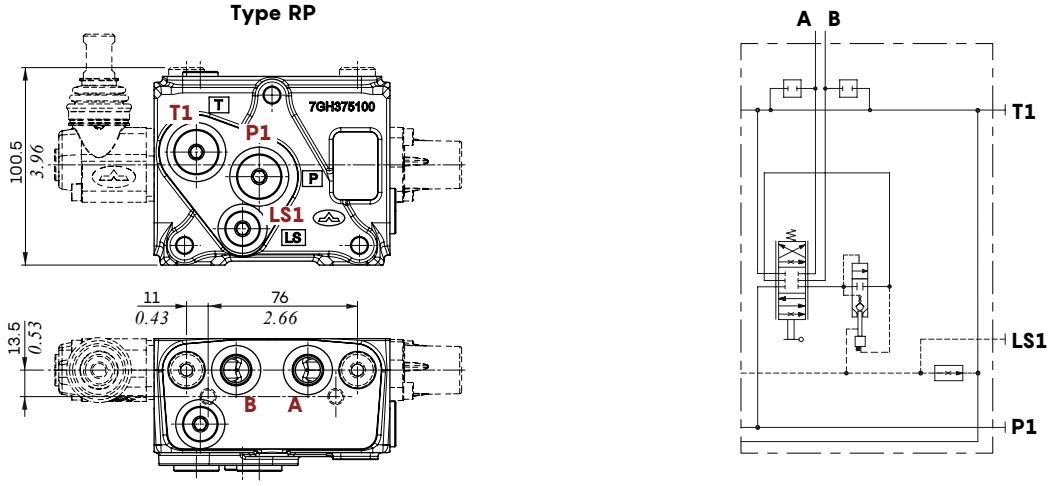

Working and outlet section

Dimensions and hydraulic circuit

Section with outlet for electrohydraulic controls

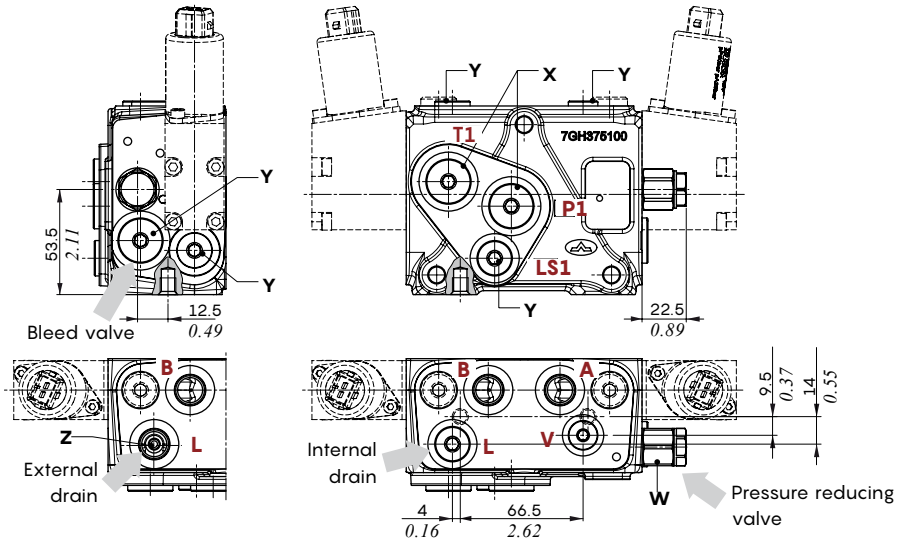

Bleed valve diagram
Flow vs. Pressure

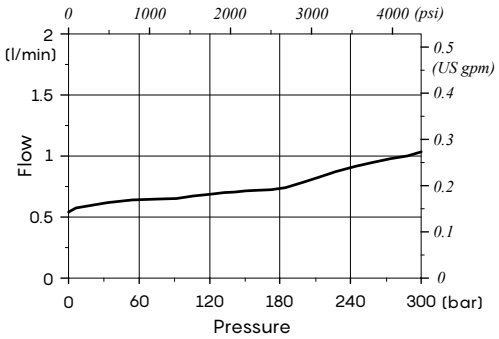

Wrenches and tightening torques

X = allen wrench 8 - 24 Nm *(17.7 lbft)*
Y = allen wrench 6 - 24 Nm *(17.7 lbft)*
Z = allen wrench 5 - 9.8 Nm *(7.2 lbft)*
W = wrench 19 - 24 Nm *(17.7 lbft)*

Bleed valve features

Max. inlet pressure . . . : 300 bar *(4350 psi)*
Max. back pressure. . . : 25 bar *(363 psi)*

Pressure reducing valve features

Max. inlet pressure . . . : 380 bar *(5500 psi)*
Reduced pressure . . . . : 30-45 bar *(435-650 psi)*
Max. back pressure. . . : 25 bar *(363 psi)*

Pressure reducing valve diagram
Reduced pressure vs. Inlet pressure

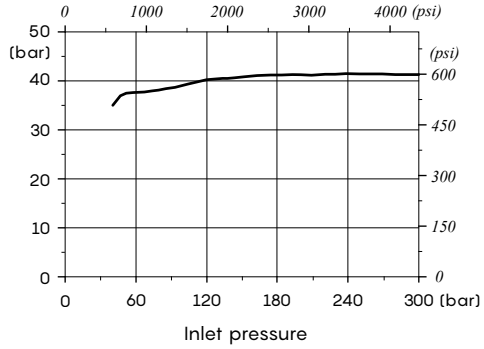

Type RQE or RPE

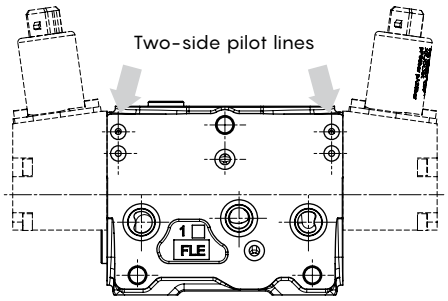

Type RQE
(**RT** configuration; without pressure reducing valve, seat plugged)

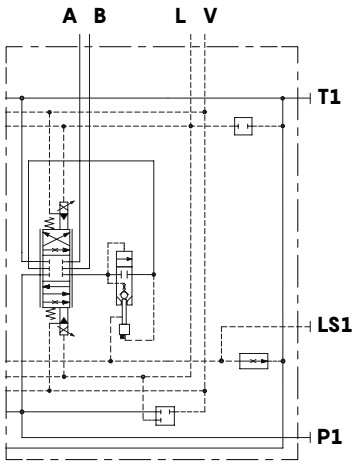

Type RPE
(**RT** configuration; without pressure reducing valve, seat plugged)

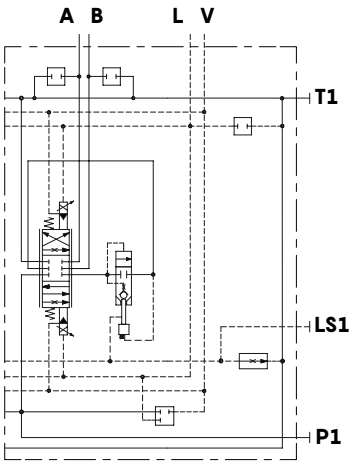

Working and outlet section

Dimensions and hydraulic circuit

Type RQZ or RPZ

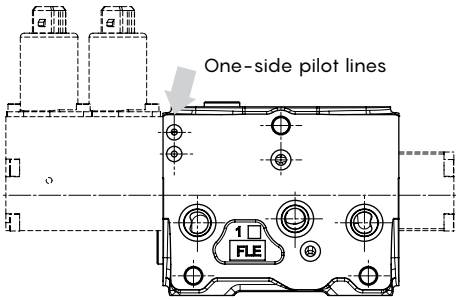

Type RQZ
(With pressure reducing valve)

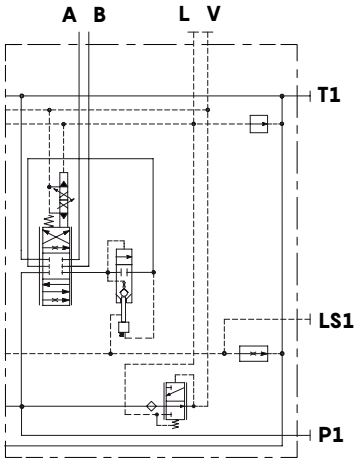

Type RPZ
(With pressure reducing valve)

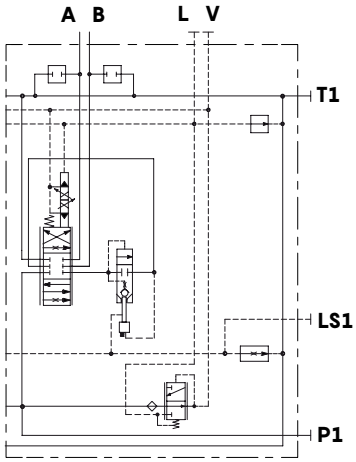

Spool

Type 1 (1../I1..)
A, B closed in neutral position
with 3 position control

1 **0** 2

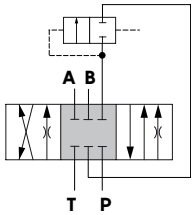

Stroke
position 1: + 5.5 mm *(+ 0.22 in)*
position 2: - 5.5 mm *(- 0.22 in)*

with 4 position control

1 **0** 2 3

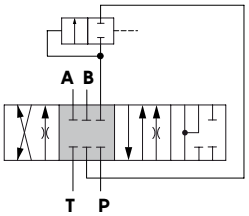

Stroke
position 1: + 5.5 mm *(+ 0.22 in)*
position 2: - 5.5 mm *(- 0.22 in)*
position 3: - 10 mm *(- 0.39 in)*

Type 2 (2../I2..)
A, B to tank
in neutral position

1 **0** 2

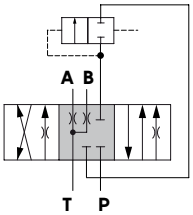

Stroke
position 1: + 5.5 mm *(+ 0.22 in)*
position 2: - 5.5 mm *(- 0.22 in)*

Type 2H (2H../I2H..)
A, B partially to tank
in neutral position

1 **0** 2

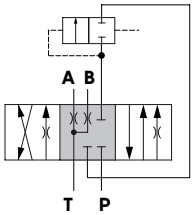

Stroke
position 1: + 5.5 mm *(+ 0.22 in)*
position 2: - 5.5 mm *(- 0.22 in)*

Type 3 (3../I3..)
Single acting on A

1 **0** 2

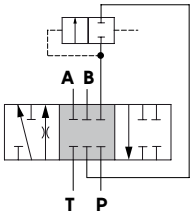

Stroke
position 1: + 5.5 mm *(+ 0.22 in)*
position 2: - 5.5 mm *(- 0.22 in)*

Type 4 (4../I4..)
Single acting on B

1 **0** 2

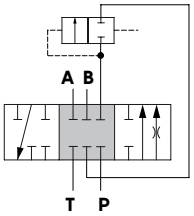

Stroke
position 1: + 5.5 mm *(+ 0.22 in)*
position 2: - 5.5 mm *(- 0.22 in)*

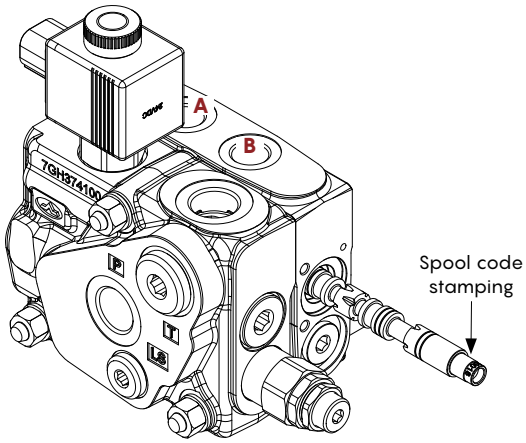

In case of spool replacement the code stamping must be oriented toward B port.

Working and outlet section

Spool

Following curves are detected with standard spools, connecting P⇒A⇒B⇒T and P⇒B⇒A⇒T ports without flow multiplication. Customized spools with backpressure or flow multiplication may require different force, pressure and pilot current for operation.

Spool flow vs. Stand-by pressure (margin pressure)

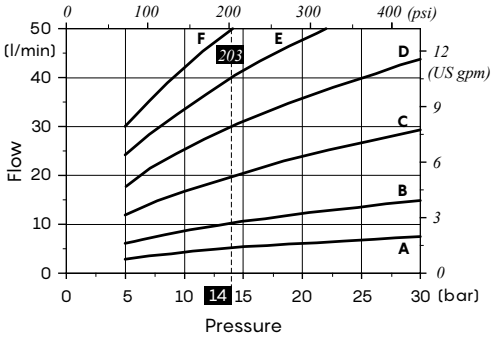

Curves with spool nominal flow @ 14 bar *(200 psi)* **stand-by (margin pressure)**

A = 5 l/min *(1.3 US gpm)* ± 10%
B = 10 l/min *(2.6 US gpm)* ± 10%
C = 20 l/min *(5.3 US gpm)* ± 10%
D = 30 l/min *(7.9 US gpm)* ± 10%
E = 40 l/min *(10.6 US gpm)* ± 10%
F = 50 l/min *(12.2 US gpm)* ± 10%

3 positions spools metering curve

Qin = 50 l/min *(13.2 US gpm)* - Open center circuit

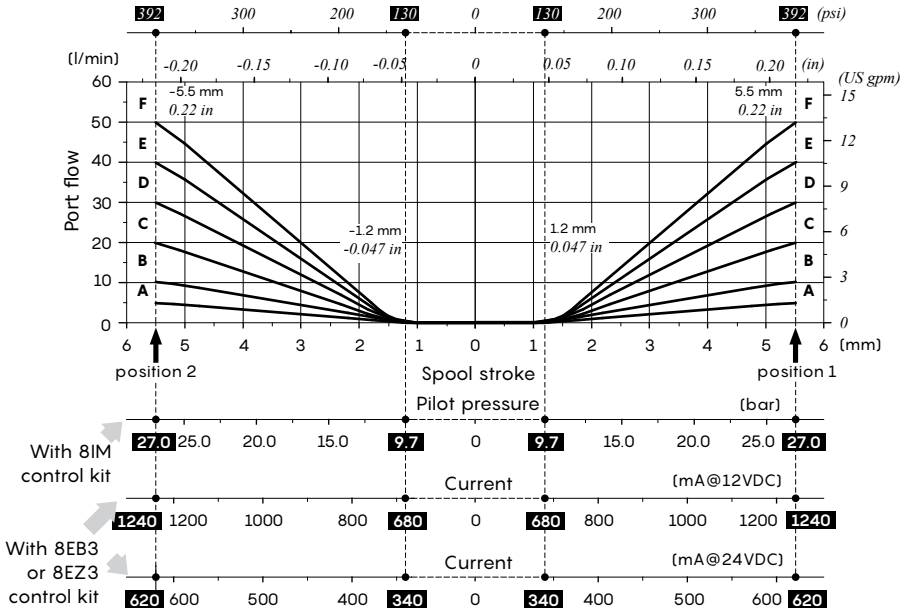

Floating spool metering curve

Qin = 50 l/min *(13.2 US gpm)* - Open center circuit

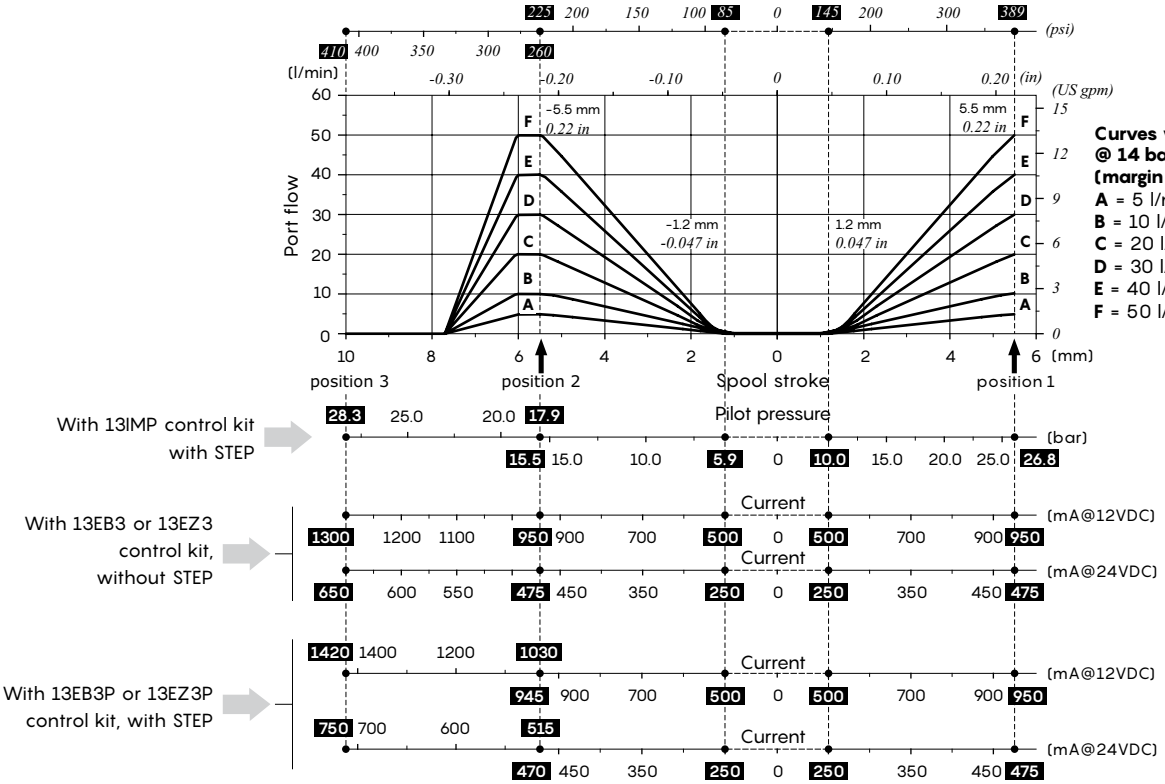

Curves with spool nominal flow @ 14 bar *(200 psi)* **stand-by (margin pressure)**

A = 5 l/min *(1.3 US gpm)*
B = 10 l/min *(2.6 US gpm)*
C = 20 l/min *(5.3 US gpm)*
D = 30 l/min *(7.9 US gpm)*
E = 40 l/min *(10.6 US gpm)*
F = 50 l/min *(12.2 US gpm)*

Working and outlet section

"A" side spool positioners

With friction and neutral position notch

Type 7FT

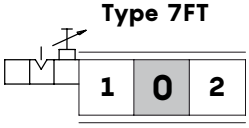

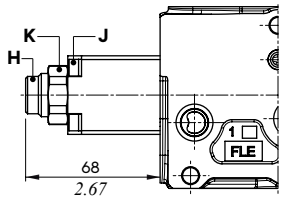

2 positions, with detent in position 1 and 2

Type 12

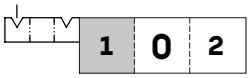

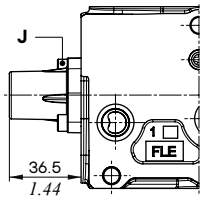

Release force 230 N ± 10 N
(51.7 lbf ± 2.2 lbf)

Wrenches and tightening torques

J = allen wrench 4 - 6,6 Nm *(4.9 lbft)*
H = allen wrench 4
K = wrench 28 - manual tightening

With spring return to neutral position

Type 8

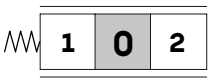

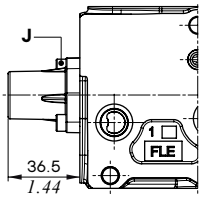

Type 8F2
Spool stroke limiter
on B port

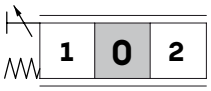

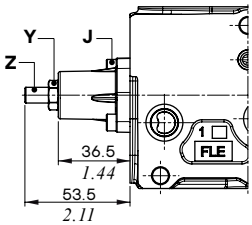

Type 8D
External pin with
M6 female thread

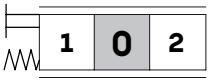

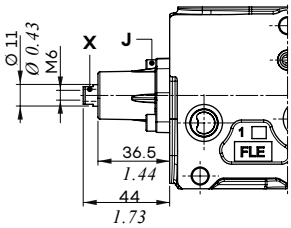

Wrenches and tightening torques

J = allen wrench 4 - 6.6 Nm *(4.9 lbft)*
X = wrench 9
Y = wrench 13 - 24 Nm *(17.7 lbft)*
Z = allen wrench 4

Type 8D2
External pin with
M8 male thread

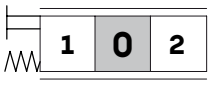

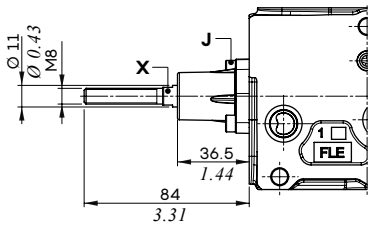

Force vs. Stroke diagram

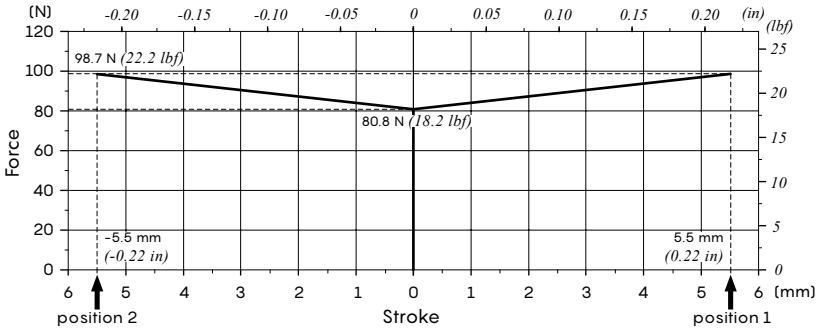

Working and outlet section

"A" side spool positioners

With detent and spring return to neutral position

Type 9BZ
Detent in position 1
(see A curve)

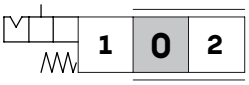

Type 10BZ
Detent in position 2
(see B curve)

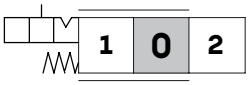

Type 11BZ
Detent in positions 1
(A curve) and 2 (B curve)

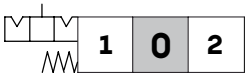

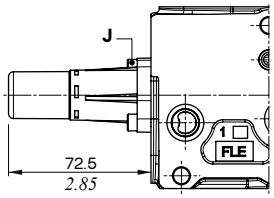

Force vs. Stroke diagram

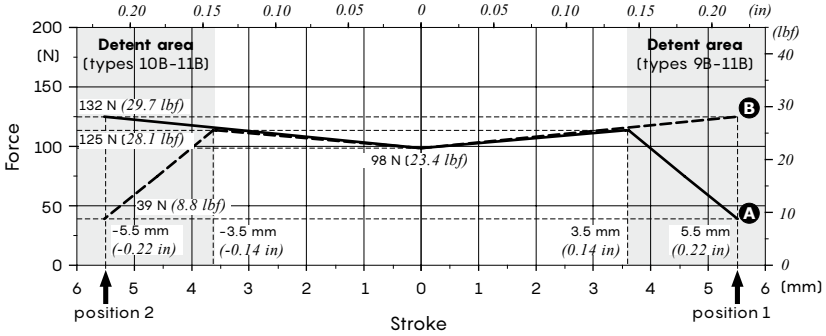

Release force 230 N ± 10% *(51.7 lbf ± 10%)*

Wrenches and tightening torques
J = allen wrench 4 - 6.6 Nm *(4.9 lbft)*

With detent and spring return to neutral position, for floating circuit

Type 13RZ

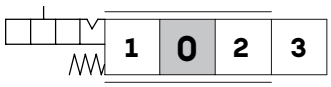

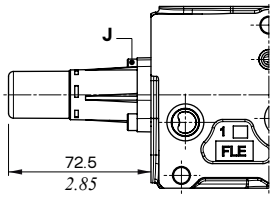

Force vs. Stroke diagram

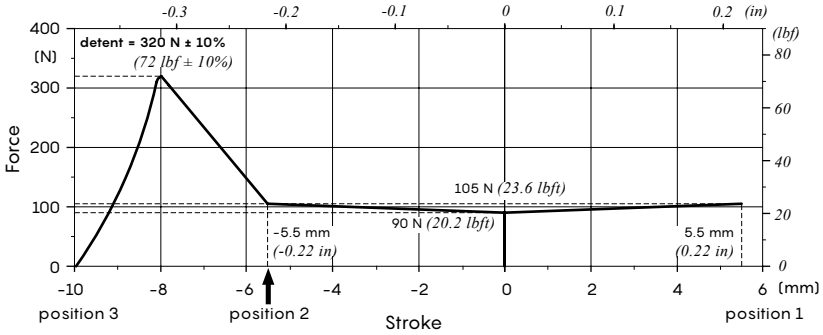

Release force from pos.3: 315 N ± 10% *(71 lbf ± 10%)*

Wrenches and tightening torques
J = allen wrench 4 - 6.6 Nm *(4.9 lbft)*

Working and outlet section

"B" side spool control kit

Lever box

Type L

1	0	2	3

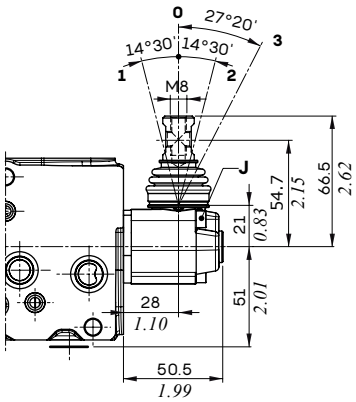

L180 configuration

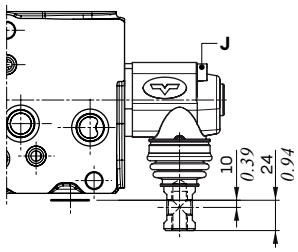

Type LF1
Spool stroke limiter on A port

1	0	2	3

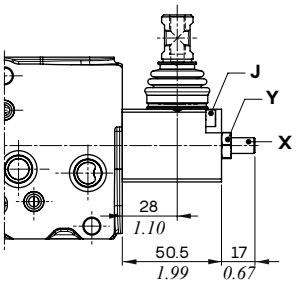

Wrenches and tightening torques
J = allen wrench 4 - 6.6 Nm *(4.9 lbft)*
X = allen wrench 4
Y = wrench 13 - 24 Nm *(17.7 lbft)*

Without lever box

Type TQ
Flexible cable connection

1	0	2	3

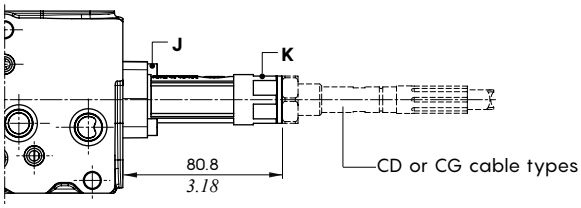

Wrenches and tightening torques
J = allen wrench 4 - 6.6 Nm *(4.9 lbft)*
K = wrench 24 *(17.7 lbft)*

Type SLP
Dust-proof plate

1	0	2	3

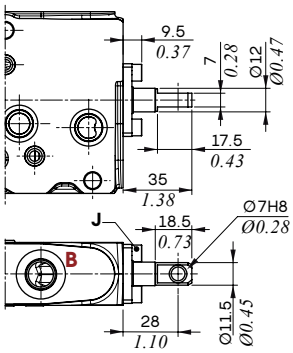

Working and outlet section

Proportional hydraulic control

Types 8IM - 8IMX

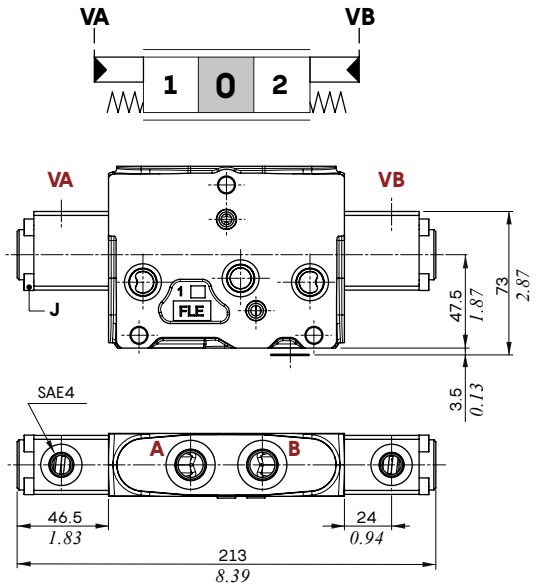

Types 8IMF3 - 8IMXF3

With spool stroke limiter on A and B ports

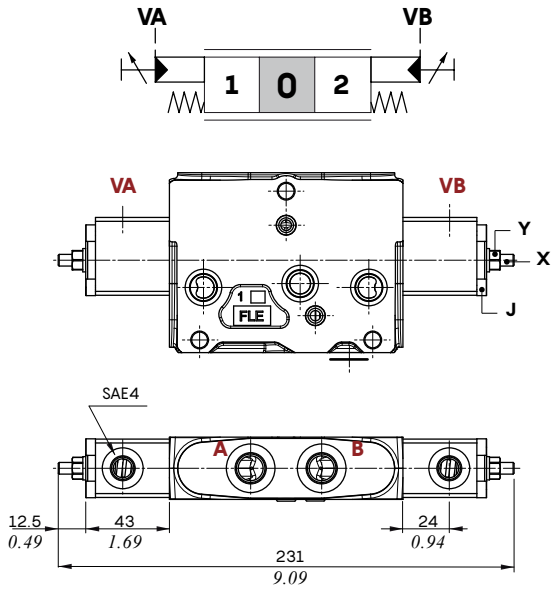

Features (all types)

Max. pressure . . . . . : 70 bar *(1010 psi)*

Wrenches and tightening torques

J = allen wrench 4 - 6.6 Nm *(4.9 lbft)*

X = allen wrench 3

Y = wrench 10 - 9.8 Nm *(7.2 lbft)*

Types 8IM-8IMF3: Stroke vs. Pressure diagram

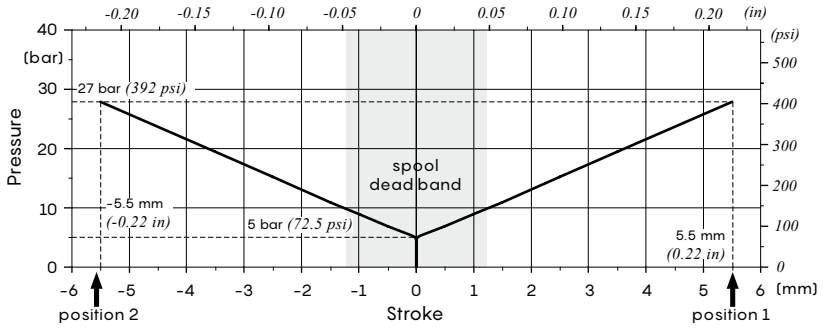

Suggested pressure control curve: type 089

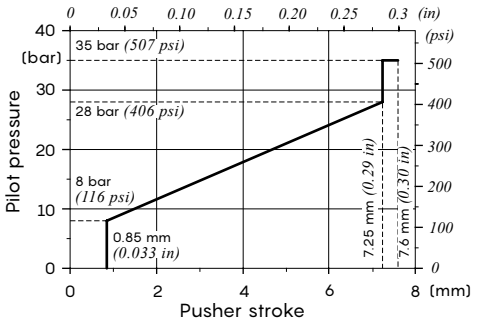

Types 8IMX-8IMXF3: Stroke vs. Pressure diagram

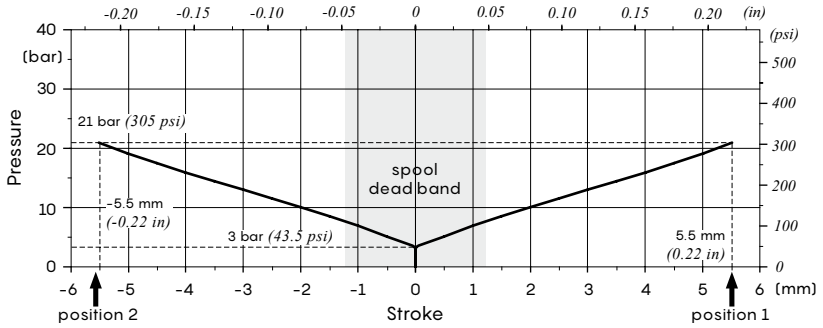

Suggested pressure control curve: type 028

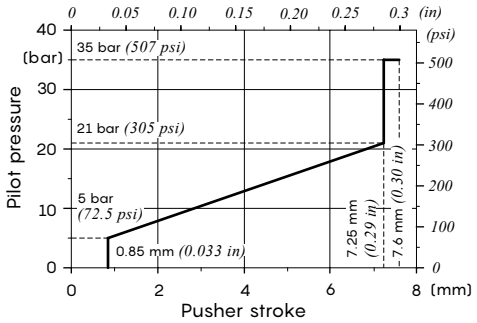

Working and outlet section

Proportional hydraulic control

Type 13IMP

For floating circuit

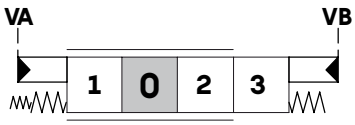

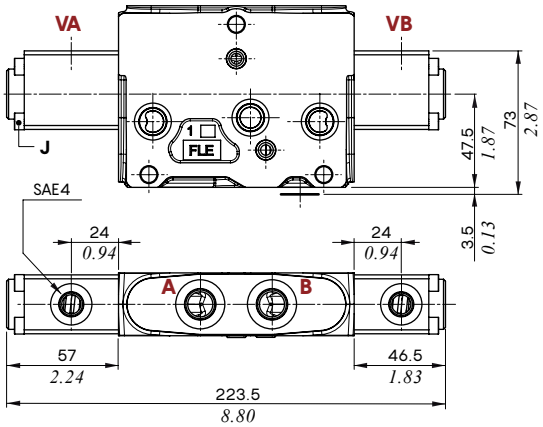

Features

Max. pressure . . . . . : 70 bar *(1010 psi)*

Suggested pressure control curve on VA port: type 089

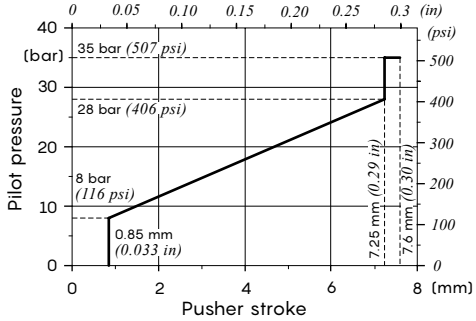

Wrenches and tightening torques

J = allen wrench 4 - 6.6 Nm *(4.9 lbft)*

Stroke vs. Pressure diagram

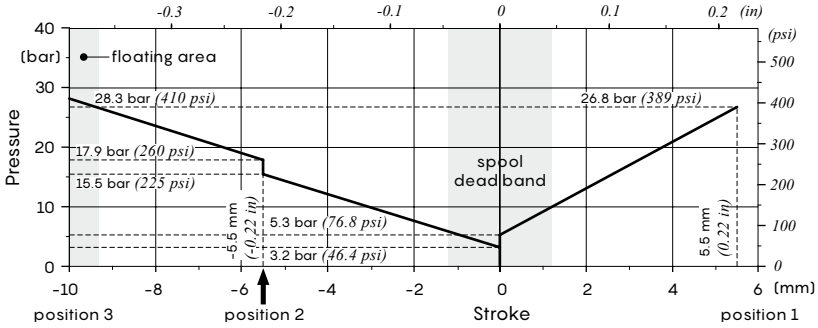

Suggested pressure control curve on VB port: type 086

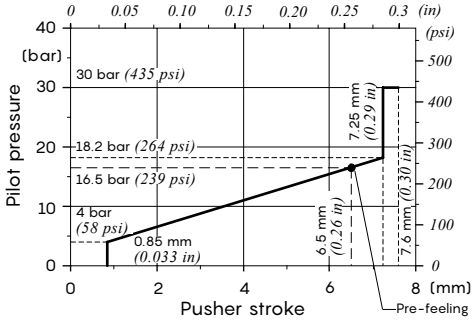

Working and outlet section

Electrohydraulic control performace data

Following specifications are measured with:
- mineral oil of 46 mm²/s - *46 cSt* viscosity at 40°C - *104°F* temperature,
- standard spools, connecting P⇒A⇒B⇒T ports without flow multiplication,
- 12 VDC and 24 VDC nominal voltage with ± 10% tolerance.

Following electrohydraulic controls need CED400W electronic unit; for information please contact Sales Department.

Specifications		Spool control type			
		8EB3	13EB3P	8EZ3	13EZ3P
Electric specifications					
Coil impedance	12 VDC	4.72 Ω	4.72 Ω	4.72 Ω	4.72 Ω
	24 VDC	20.8 Ω	20.8 Ω	20.8 Ω	20.8 Ω
Max. operating current	12 VDC	1.5 A	1.5 A	1.5 A	1.5 A
	24 VDC	0.75 A	0.75 A	0.75 A	0.75 A
No load current consumption		0	0	0	0
Hysteresis max. (1)				With lever box configured controls	
	external drain	4%	4%	6%	6%
	internal drain	5%	5%	7%	7%
Time response	from 0 ⇒ 100% and from 100% ⇒ 0 of stroke	< 60 ms	< 85 ms	< 75 ms	< 85 ms
Min. flow control signal	12 VDC	680 mA	500 mA	680 mA	500 mA
	24 VDC	340 mA	250 mA	340 mA	250 mA
Max. flow control signal	12 VDC	1240 mA	P⇒A: 950 mA P⇒B: 945 mA 1030 mA	1240 mA	P⇒A: 950 mA P⇒B: 945 mA 1030 mA
	24 VDC	620 mA	P⇒A: 475 mA P⇒B: 470 mA 515 mA	620 mA	P⇒A: 475 mA P⇒B: 470 mA 515 mA
Float flow control signal	12 VDC		1420 mA		1420 mA
	24 VDC		710 mA		710 mA
Dither frequency	low frequency	150 Hz		150 Hz	
	high frequency	180 Hz - 200 mA		180 Hz - 200 mA	
Insertion		100%		100%	
Coil insulance		Class H (180°C - *356°F*)		Class H (180°C - *356°F*)	
Connector type		AMP JPT - Deutsch DT		AMP JPT - Deutsch DT	
Weather protection (connector)		IP65 (JPT type) - IP69K (DT type)		IP65 (JPT type) - IP69K (DT type)	
Hydraulic specifications					
Max. pressure		40 bar *(580 psi)*		50 bar *(725 psi)*	
Max. back pressure		10 bar *(145 psi)*		10 bar *(145 psi)*	

Note (1) hysteresis is indicated at nominal supply voltage and f = 0.008 Hz for one cycle (one cycle = neutral ⇒ full A ⇒ neutral ⇒ full B ⇒ neutral).
For the calculation rules see "Appendix A" on page 170.

Electrohydraulic control performace data

Types 8EB3-8EZ3: Stroke vs. Current diagram

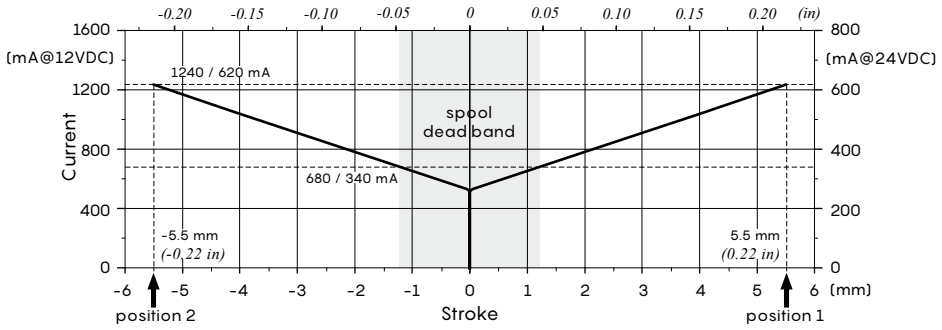

Types 13EB3P-13EZ3P: Stroke vs. Current diagram

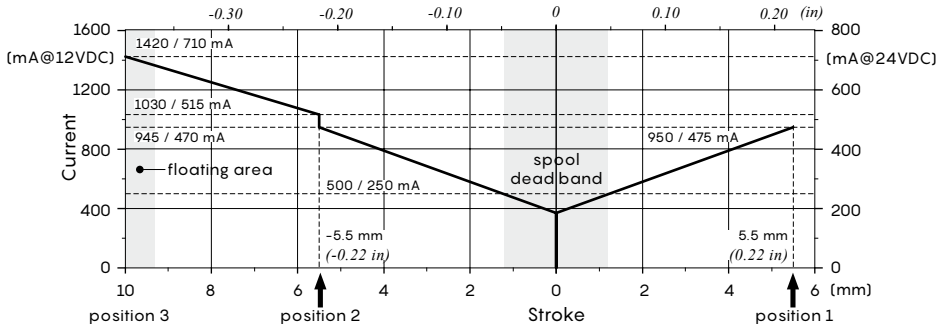

Working and outlet section

Electrohydraulic controls: spool position sensor

The sensor can be ordered exclusively through the EB and EZ type electrohydraulic controls; see page 23 for available control list.

SPSL sensor

The SPSL position sensor converts the spool movements into a voltage linear signal.

Working conditions		
Voltage supply		5 VDC
Current absorption		< 10 mA (no load)
Mechanical life		$3x10^6$
Connector type		DT04-4P Deutsch
Weather protection		IP67 / IP69K
Working temperature		from -40°C to 105°C *(from -40°F to 221°F)*
Working pressure		350 bar *(5100 psi)*
Max. electrical stroke		±10 mm *(±0.39 in)*
Max. mechanical stroke		±10 mm *(±0.39 in)*
Output signal	range	from 0.5 to 4.5 V
	linearity	± 5%
	spool in neutral	2.5 ± 0.2 V
	max. current	1 mA
EMC compatibility		ISO 13766 / ISO 14982
Mechanical vibrations, shock, bumps		IEC 68-2-6,-27,-29

SPSL sensor output signal

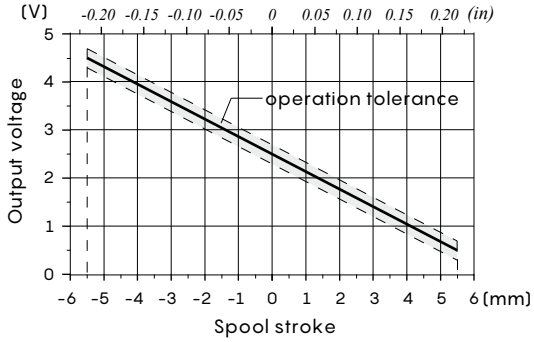

Deutsch DT04-4P connector	
Pin	**Function**
1	+ 5V
2	not connected
3	GND
4	signal OUT

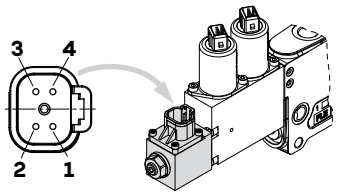

Deutsch DT06-4S mating connector, code 5CON140072

SPSD sensor

The SPSD position sensor converts the spool movements into an electric digital signal.

Working conditions		
Voltage supply		from 9 to 32 VDC
Current absorption		< 10 mA (no load)
Mechanical life		$3x10^6$
Connector type		DT04-4P Deutsch
Weather protection		IP67 / IP69K
Working temperature		from -40°C to 105°C *(from -40°F to 221°F)*
Working pressure		350 bar *(5100 psi)*
Max. electrical stroke		±10 mm *(±0.39 in)*
Max. mechanical stroke		±10 mm *(±0.39 in)*
Output signal	type	PNP
	max. current	6 mA
EMC compatibility		ISO 13766 / ISO 14982
Mechanical vibrations, shock, bumps		IEC 68-2-6,-27,-29

SPSD sensor output signal

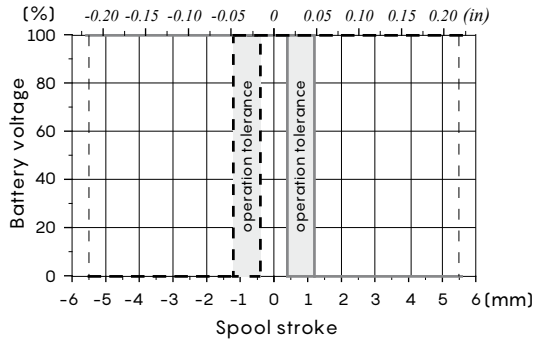

Deutsch DT04-4P connector	
Pin	**Function**
1	Out A
2	GND
3	VB +
4	Out B

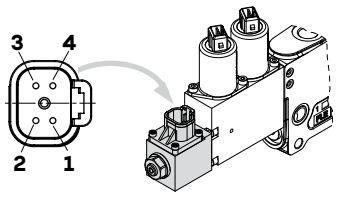

Deutsch DT06-4S mating connector, code 5CON140072

Working and outlet section

Two-side electrohydraulic control

Control types

❶: With AMP JPT connector - AMP JPT mating connector, code: 5CON003

❷: With Deutsch DT04 connector - Deutsch DT06-2S mating connector code: 5CON140031

Types 8EB3 - 8EB34

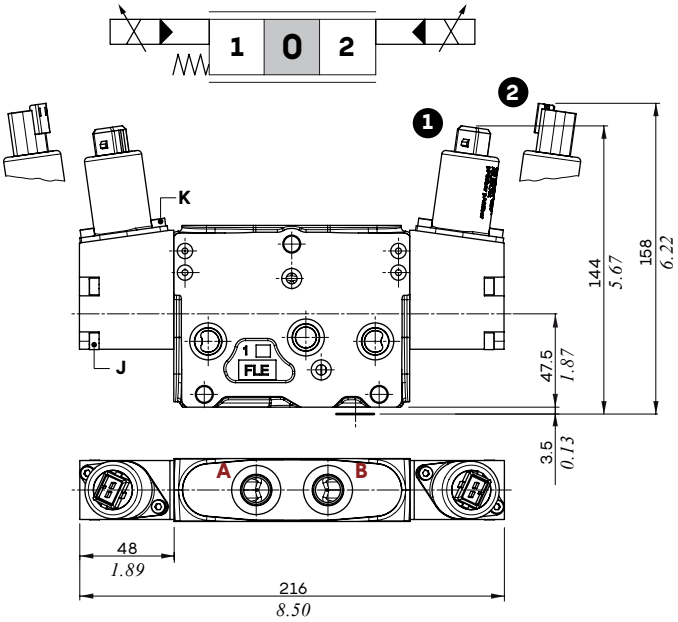

Types 8EB3F3 - 8EB34F3

With spool stroke limiter

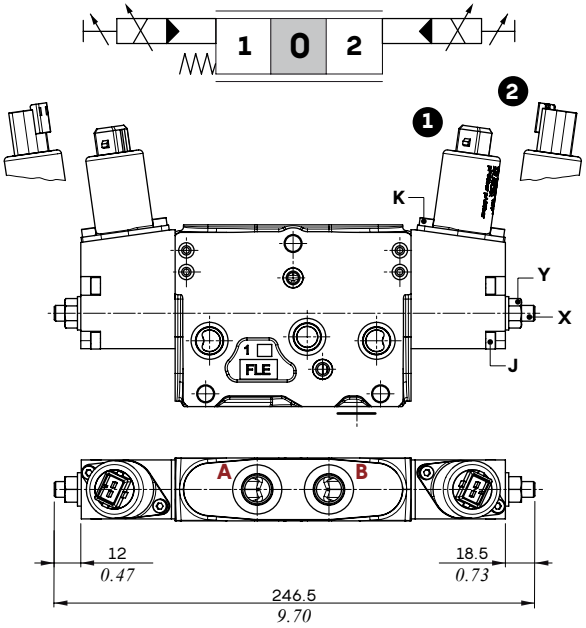

Types 13EB3P - 13EB34P

For floating circuit

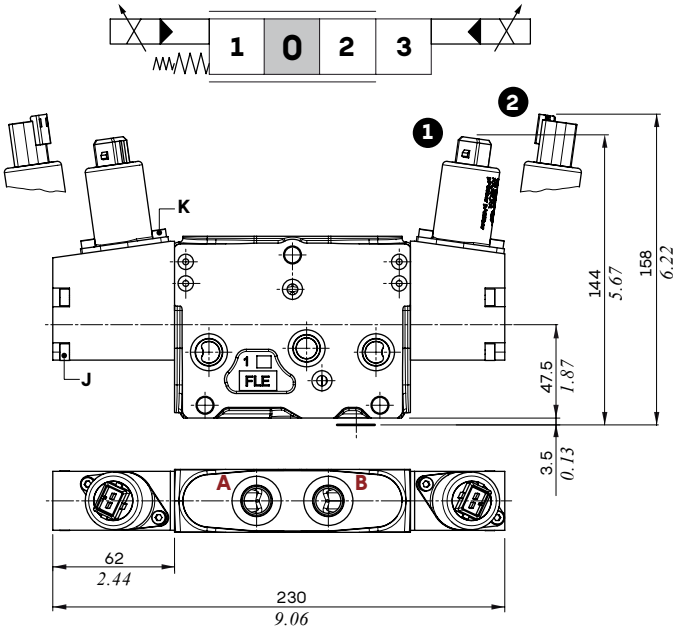

Wrenches and tightening torques

J = allen wrench 4 - 6.6 Nm *(4.9 lbft)*

K = allen wrench 3 - 5 Nm *(3.7 lbft)*

X = allen wrench 4

Y = wrench 13 - 24 Nm *(17.7 lbft)*

Working and outlet section

One-side electrohydraulic control: "A" side

Control types

❶: With AMP JPT connector - AMP JPT mating connector, code: 5CON003

❷: With Deutsch DT04 connector - Deutsch DT06-2S mating connector code: 5CON140031

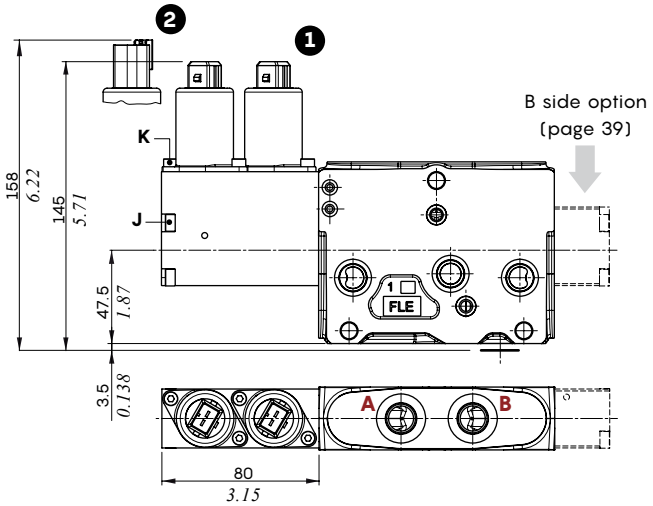

Types 8EZ3 - 8EZ34

Types 13EZ3P - 13EZ34P

For floating circuit

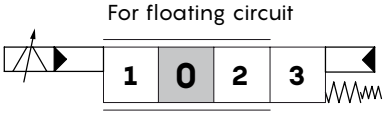

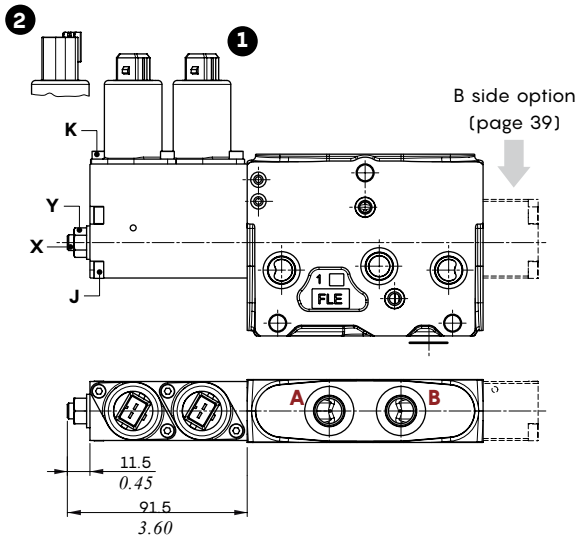

Types 8EZ3F2 - 8EZ34F2

With spool stroke limiter

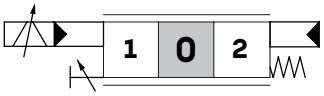

Wrenches and tightening torques

J = allen wrench 4 - 6.6 Nm *(4.9 lbft)*
K = allen wrench 3 - 5 Nm *(3.7 lbft)*
X = allen wrench 4
Y = wrench 13 - 24 Nm *(17.7 lbft)*
M = allen wrench 4 - 9.8 Nm *(7.2 lbft)*
N = wrench 17 - 9.8 Nm *(7.2 lbft)*

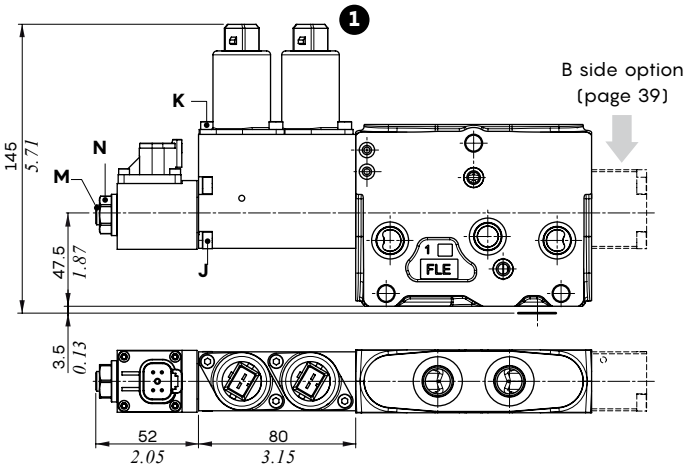

Type 8EZ3SPSD

Digital output sensor

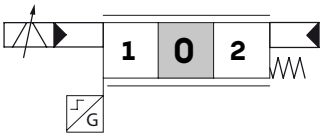

Working and outlet section

One-side electrohydraulic control: "B" side option

These options are available for one-side electyrohydraulic controls only.

Types LQ - LQ180

1	0	2	3

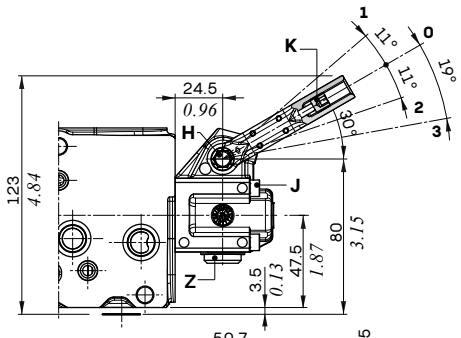

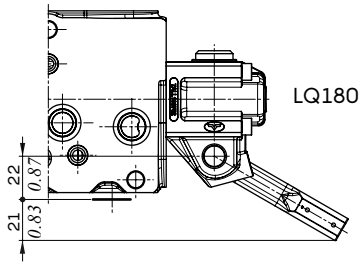

LQ180 configuration

Types LQF3 - LQF3180
With stroke limiters on
A and B ports

1	0	2	3

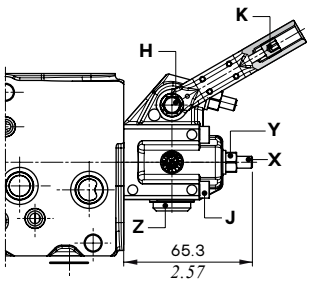

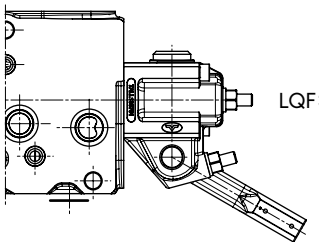

LQF3180 configuration

Wrenches andtightening torques

H = wrench 8
J = allen wrench 4 - 6.6 Nm *(4.9 lbft)*
M = allen wrench 4
N = wrench 13 - 24 Nm *(17.7 lbft)*
K = allen wrench 4 - 9.8 Nm *(7.2 lbft)*
X = allen wrench 3
Y = wrench 10 - 9.8 Nm *(7.2 lbft)*
Z = allen wrench 6 - 24 Nm *(17.7 lbft)*

Type SLC
With endcap

1	0	2	3

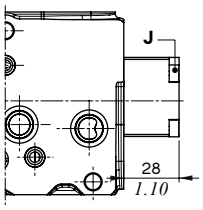

Type SLCF1
Spool stroke limiter
on A port

1	0	2	3

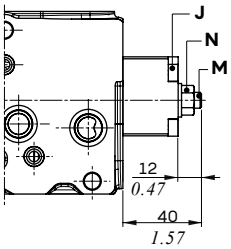

Working and outlet section

Port valves

On standard section

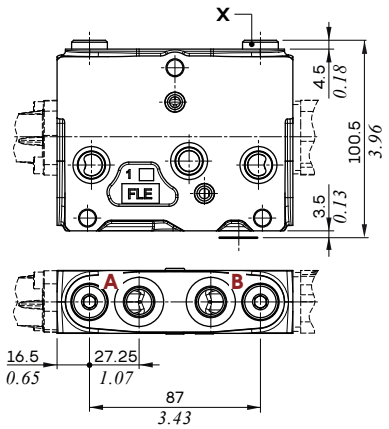

On Low Leak section

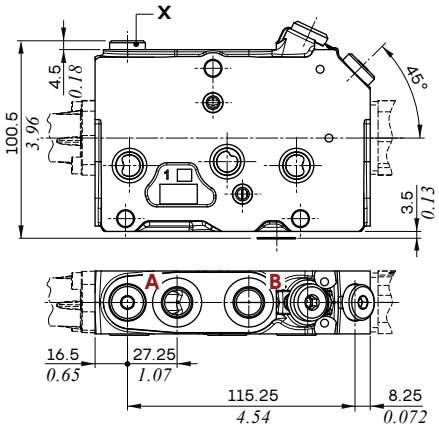

Type U valve: antishock valves with prefill

Type C valve: anticavitation

Wrenches and tightening torques

X = allen wrench 6 - 24 Nm *(17.7 lbft)*

Type U
Setting example
(10 l/min - *2.6 Us gpm*)

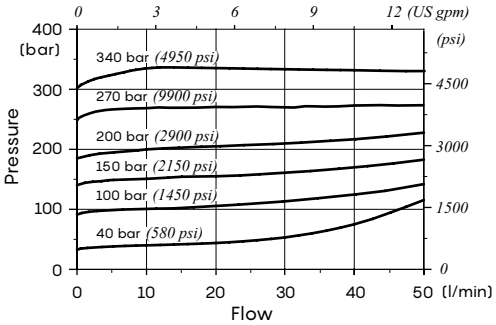

Types U and C: pressure drops

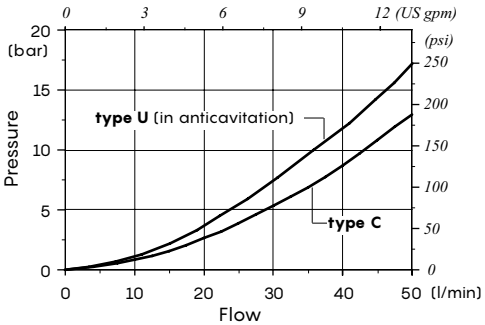

LL complete section ordering codes

A Mechanical and hydraulic controls configuration:

Nr. of working sections

DPX050/4/AM2(TGW3-175\ELN)/PLL-I104LL(40\40)-8IM.U3T/Q-104(40\40)-8IM/RQ-104(40\40)-8L-SAE-12VDC

1 2A 2B 3 4 5

DPX050: For working conditions and guide to mixed (**Low Leak** and **Standard sections** both) configuration see pages 5, 6, 12, 13.

B Electrohydraulic controls configuration:

DPX050/4/AM2(TGW3-175\ELN)/PZLL-I104LL(40\40)-8EZ3LQ.U3T/QZ-I104(40\40)-8EZ3SLC/

1 2A 2B

RQE-I104(40\40)-8EB3F3-SAE-12VDC

3 4 5

Tie rod tightening
wrench 13 - 30 Nm *(22 lbft)*

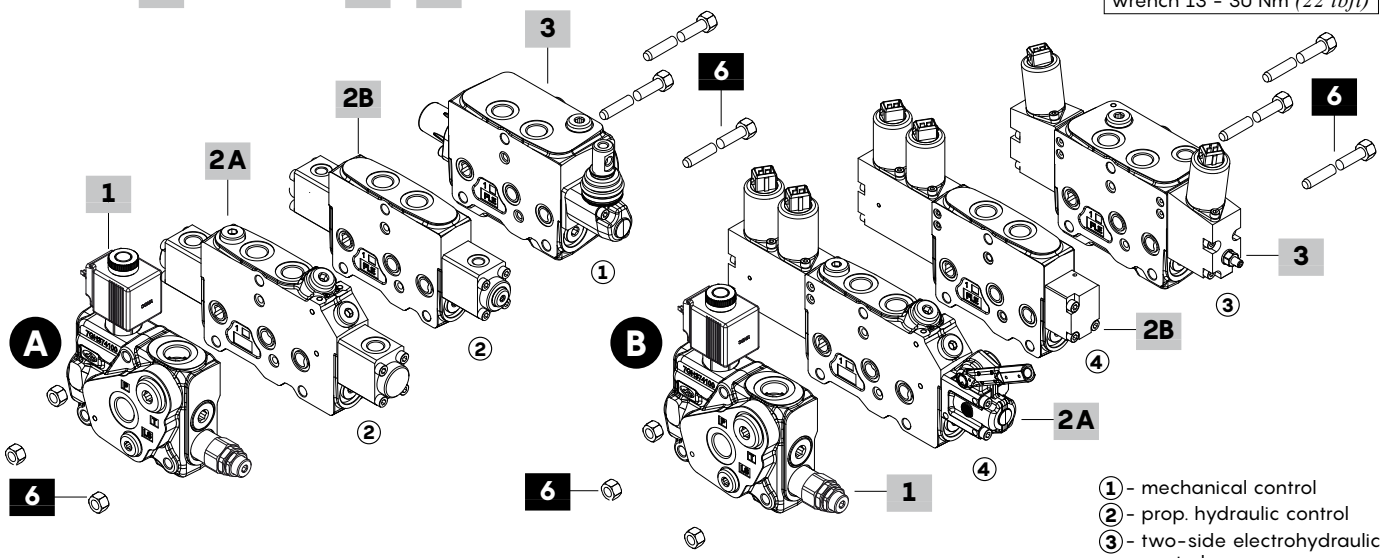

① - mechanical control
② - prop. hydraulic control
③ - two-side electrohydraulic control
④ - one-side electrohydraulic control

1 Complete inlet section *

All inlet sections listed in the catalogue can be used; see page 15

2A Complete Low Leak working section *

Mechanical control
TYPE: **DPX050/QLL-104LL(40\40)-8L-SAE**
CODE: 660100007S
DESCRIPTION: Lever control without port valve arrangement
TYPE: **DPX050/PLL-104LL(40\40)- 8L.U3T-SAE**
CODE: 660100008S
DESCRIPTION: As previous with port valve arrangement
Proportional hydraulic control
TYPE: **DPX050/QLL-I104LL(40\40)-8IM-SAE**
CODE: 660100009S
DESCRIPTION: Without port valve arrangement
TYPE: **DPX050/PLL-I104LL(40\40)-8IM.U3T-SAE**
CODE: 660100010S
DESCRIPTION: With port valve arrangement
One-side proportional electrohydraulic control
TYPE: **DPX050/QZLL-I104LL(40\40)-8EZ3LQF3-12VDC-SAE**
CODE: 660100011S
DESCRIPTION: With lever and spool stroke limiter, without port valve arrangement
TYPE: **DPX050/PZLL-I104(40\40)-8EZ3LQF3.U3T-12VDC-SAE**
CODE: 660100012S
DESCRIPTION: As previous one with port valve arrangement

2B Complete Standard working section *

All sections listed in the catalogue can be used (see page 15), considering the configuration rules indicated on pages 12, 13.

3 Complete working section with outlet *

All inlet sections listed in the catalogue can be used, considering the configuration rules indicated on pages 12, 13.

4 Valve threading

Only specify if it is different from **BSP** standard (see page 7).

5 Voltage

Specify the voltage of electric devices.

6 Assembling kit

Need standard tie rods; see page 15

NOTE (*): Codes are referred to **UN-UNF** thread.

LL working section part ordering codes (mechanical and hydraulic)

A Mechanical control configuration:

Flow on A/B ports (l/min)
Valve setting (bar) A port B port

DPX050 / PLL - 104LL(40\40) - 8 L . U1(100) U2(120) - SAE

1 2 3 4 6 7

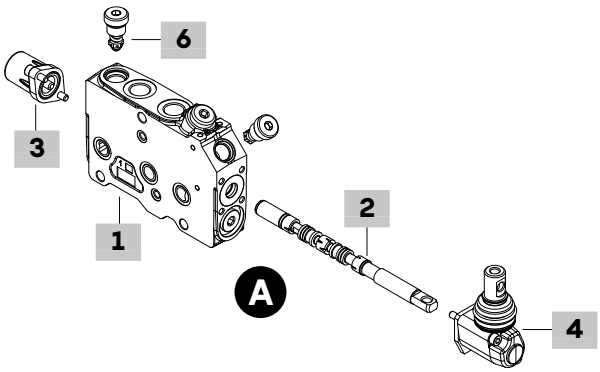

B Prop. hydraulic control configuration:

DPX050 / QLL - I104LL(40\40) - 8IM - SAE

1 2 5 7

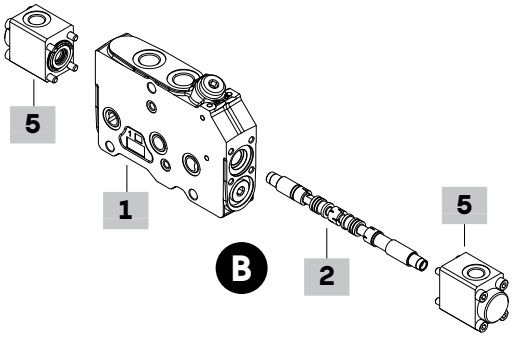

1 Low Leak working section kit * page 44

For mechanical control

TYPE: **DPX050/QLL-SAE-FPM** CODE: 5EL10A7021LV
DESCRIPTION: Without port valve arrangement
TYPE: **DPX050/PLL-SAE-FPM** CODE: 5EL10A7020LV
DESCRIPTION: With port valve arrangement

For proportional hydraulic control

TYPE: **DPX050/QLL-IM-SAE-FPM** CODE: 5EL10A7021ALV
DESCRIPTION: Without port valve arrangementrie
TYPE: **DPX050/PLL-IM-SAE-FPM** CODE: 5EL10A7004V
DESCRIPTION: With port valve arrangemente

2 Low Leak spool page 45

Flow is referred to 14 bar *(200 psi)* stand-by (margin pressure)

TYPE	CODE	DESCRIPTION
For mechanical control		
Double acting with A and B closed in neutral position, floating circuit with 13RZ type positioner (4 position)		
105LL(50)	3CUA110005L	50 l/min *(13 US gpm)* flow
104LL(40)	3CUA110004L	40 l/min *(10.5 US gpm)* flow
103LL(30)	3CUA110003L	30 l/min *(7.9 US gpm)* flow
102LL(20)	3CUA110002L	20 l/min *(5.3 US gpm)* flow
101LL(10)	3CUA110001L	10 l/min *(2.6 US gpm)* flow
106LL(5)	3CUA110006L	5 l/min *(1.3 US gpm)* flow
For proportional hydraulic control		
Double acting with A and B closed in neutral position, floating circuit with 4 positions 13IMP type contro		
I105LL(50)	3CUA310005L	50 l/min *(13 US gpm)* flow
I104LL(40)	3CUA310004L	40 l/min *(10.5 US gpm)* flow
I103LL(30)	3CUA310003L	30 l/min *(7.9 US gpm)* flow
I102LL(20)	3CUA310002L	20 l/min *(5.3 US gpm)* flow
I101LL(10)	3CUA310001L	10 l/min *(2.6 US gpm)* flow
I106LL(5)	3CUA310006L	5 l/min *(1.3 US gpm)* flow

NOTE (*): Codes are referred to **UN-UNF** thread.

3 "A" side spool positioners page 29

Controls for LL sections are the same as for Standard Pressure sections

TYPE	CODE	DESCRIPTION
7FT	5V0710A001	With friction and neutral position notch
8	5V08102000	3 pos. with spring return to neutral position
8F2	5V0810A001	Spool stroke limiter on B port
8D	5V08102200	External pin with M6 female thread
8D2	5V08102220	External pin with M8 male thread
9BZ	5V09202010	Detent in position 1
10BZ	5V10202010	Detent in position 2
11BZ	5V11202010	Detent in positions 1 and 2
12	5V12102000	2 positions, detent in pos. 1 and 2
For floating circuit (standard spool)		
13RZ	5V13306020	4 pos., detent in 4th position with spool in, spring return to neutral position

4 "B" side spool control kit page 31

Controls for LL sections are the same as for Standard Pressure sections

TYPE	CODE	DESCRIPTION
L	5LEV10A000	Standard lever box
LF1	5LEV10A001	As L type, with spool stroke limiter on A port
SLP	5COP150000	Without lever with dust-proof plate
TQ	5TEL10A100	Flexible cable connection

5 Proportional hydraulic control * page 32

Controls for LL sections are the same as for Standard Pressure sections

TYPE	CODE	DESCRIPTION
8IM-SAE	5IDR20A700AV	Range 8-27 bar *(116-392 psi)*
8IMX-SAE	5IDR20A701AV	Range 3.5-20 bar *(51-290 psi)*
8IMF3-SAE	5IDR20A702AV	Range 8-27 bar *(116-392 psi)*, with spool stroke limiter on A and B ports
8IMXF3-SAE	5IDR20A703AV	Range 3.5-20 bar *(51-290 psi)*, with spool stroke limiter on A and B ports
For floating circuit (standard spool)		
13IMP-SAE	5IDR20A710V	Range 4-16.5-28 bar *(58-239-406 psi)*

6 Port valves page 40

TYPE	CODE	DESCRIPTION
U040	5KIT308040	Setting: 40 bar *(580 psi)*

For complete list see page 21.

7 Section threading

Only specify if it is different from **BSP** standard (see page 7).

LL working section part ordering codes (electrohydraulic)

One-side electrohydraulic control configuration:

Flow on A/B ports (l/min) — Valve setting (bar) A port / B port

DPX050 / PZLL - I104LL(40\40) - 8EZ3 LQF3 . U1(100) U2(120) - SAE - 12VDC

1 — 2 — 3 — 4 — 5 — 6 — 3

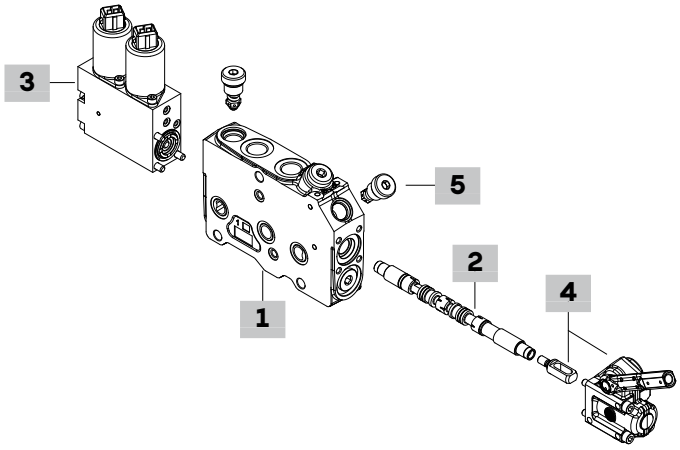

1 Low Leak working section kit * page 44

For one-side electrohydraulic control

TYPE: **DPX050/QZLL-SAE-FPM** CODE: 5EL10A7210LV
DESCRIPTION: Without port valve arrangement
TYPE: **DPX050/PZLL-SAE-FPM** CODE: 5EL10A7217V
DESCRIPTION: With port valve arrangement

2 Low Leak spool page 45

Flow is referred to 14 bar *(200 psi)* stand-by (margin pressure)

TYPE	CODE	DESCRIPTION
Double acting with A and B closed in neutral position, floating circuit with 13EZ3 type positioner (4 position).		
I105LL(50)	3CUA310005L	50 l/min *(13 US gpm)* flow
I104LL(40)	3CUA310004L	40 l/min *(10.5 US gpm)* flow
I103LL(30)	3CUA310003L	30 l/min *(7.9 US gpm)* flow
I102LL(20)	3CUA310002L	20 l/min *(5.3 US gpm)* flow
I101LL(10)	3CUA310001L	10 l/min *(2.6 US gpm)* flow
I106LL(5)	3CUA310006L	5 l/min *(1.3 US gpm)* flow

5 Port valves page 40

TYPE	CODE	DESCRIPTION
U040	5KIT308040	Setting: 40 bar *(580 psi)*

For complete list see page 21.

6 Section threading

Only specify if it is different from **BSP** standard (see page 7).

3 One-side electrohydr.control; "A" side page 38

Controls for LL sections are the same as for Standard Pressure sections
These controls must be coupled with "B" side options

TYPE	CODE	DESCRIPTION
8EZ3-12VDC	5V0810A780V	AMP connector
8EZ3-24VDC	5V0810A785V	As previous one
8EZ3F2-12VDC	5V0810A781V	AMP connector, with spool stroke limiter
8EZ3F2-24VDC	5V0810A782V	As previous one
8EZ34-12VDC	5V0810A786V	Deutsch connector
8EZ34-24VDC	5V0810A787V	As previous one
8EZ34F2-12VDC	5V0810A783V	Deutsch connector, with spool stroke limiter
8EZ34F2-24VDC	5V0810A784V	As previous one
For floating circuit (standard spool)		
13EZ3P-12VDC	5V1310A788V	With Step, with AMP connector
13EZ3P-24VDC	5V1310A790V	As previous one
13EZ34P-12VDC	5V1310A789V	With Step, with Deutsch connector
13EZ34P-24VDC	5V1310A791V	As previous one
With spool position sensor		
8EZ3SPSD-12VDC	5V0810A790V	AMP connector and digital sensor
8EZ3SPSD-24VDC	5V0810A791V	As previous one

4 One-side electrohydr.option; "B" side page 39

Controls for LL sections are the same as for Standard Pressure sections
These options must be coupled with "A" side controls

TYPE	CODE	DESCRIPTION
LQ	5LEV10A005V	Lever control
LQ180	5LEV10A006V	As previous one, turned of 180°
LQF3	5LEV10A004V	As LQ, spool stroke limiter on A, B ports
LQF3180	5LEV10A003V	As previous one, turned of 180°
SLC	5COP150010V	Endcap
SLCF1	5COP150011V	Endcap with spool stroke limiter

NOTE (*): Codes are referred to **UN-UNF** thread.

LL working section

Dimensions and hydraulic circuit

Section for mechanical and hydraulic controls

Type QLL

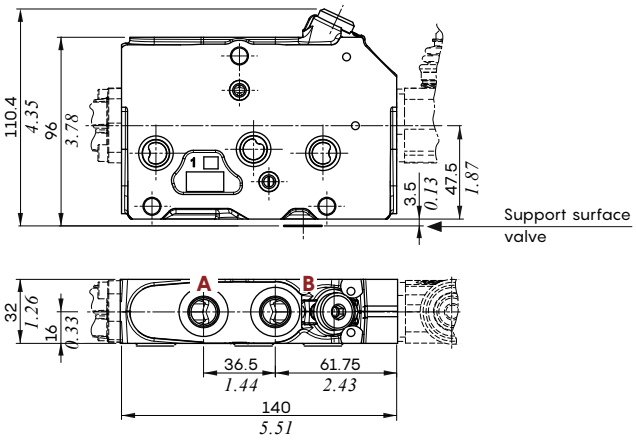

Type PLL

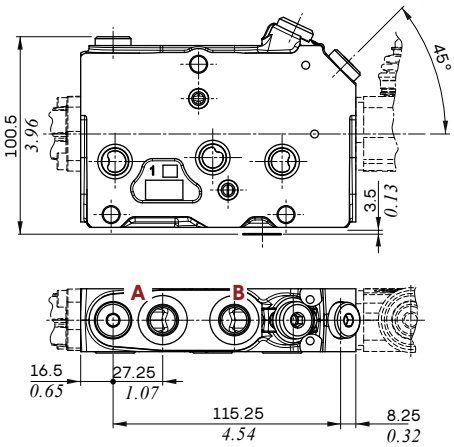

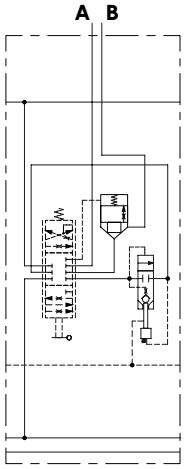

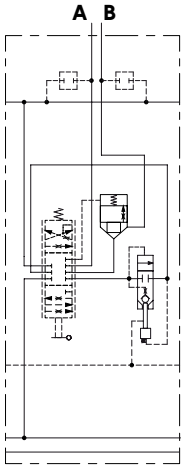

Section for electrohydraulic controls

Type QZLL or PZLL

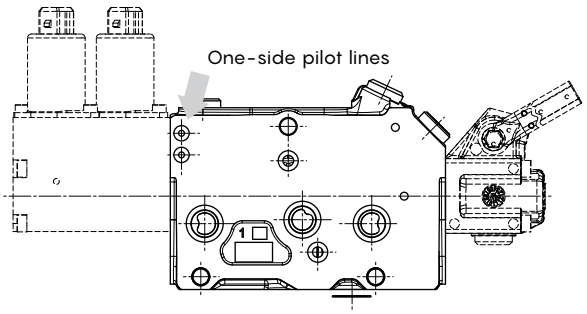

Type QZLL

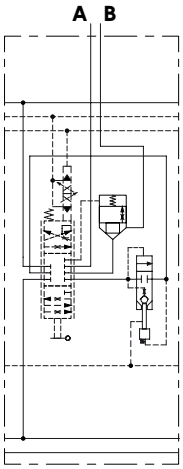

Type PZLL

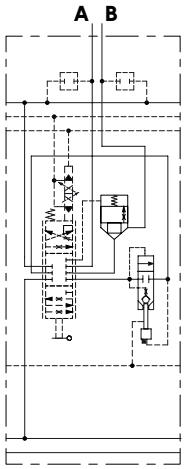

Spool

Low Leak spool metering curves are the same as the standard spools; see page 28

Type 1LL (1LL../I1LL..)
A, B closed in neutral position

with 3 position control

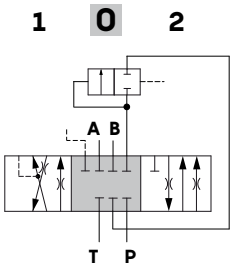

Stroke
position 1: + 5.5 mm *(+ 0.22 in)*
position 2: - 5.5 mm *(- 0.22 in)*

with 4 position control

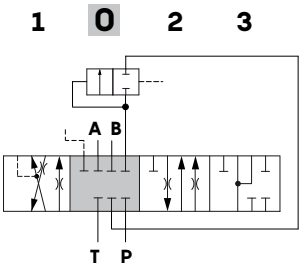

Stroke
position 1: + 5.5 mm *(+ 0.22 in)*
position 2: - 5.5 mm *(- 0.22 in)*
position 3: - 10 mm *(- 0.39 in)*

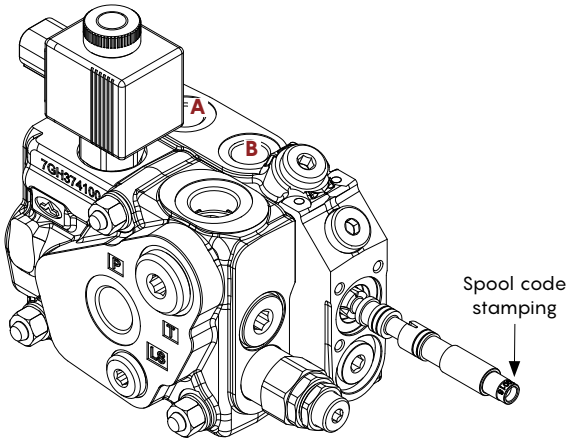

In case of spool replacement the code stamping must be oriented toward B port.

Spool flow vs. Stand-by pressure (margin pressure)

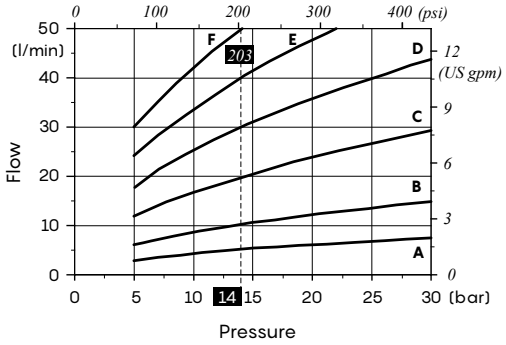

Curves with spool nominal flow
@ 14 bar *(200 psi)* **stand-by (margin pressure)**

A = 5 l/min *(1.3 US gpm)*
B = 10 l/min *(2.6 US gpm)*
C = 20 l/min *(5.3 US gpm)*
D = 30 l/min *(7.9 US gpm)*
E = 40 l/min *(10.6 US gpm)*
F = 50 l/min *(12.2 US gpm)*

Content

- **DPX100**
  - Dimensional data and performance ..... page 48
  - Hydraulic circuit
    - Configuration example with mechanical and hydraulic controls ..... page 49
    - Configuration example with electrohydraulic controls 49
  - Guide to configuration
    - Pressure peak reduction ..... page 50
    - High Pressure (HP) valve configuration 51
    - High Flow (HF) valve configuration 52
    - Directional valve with Low Leak working sections 54
  - Complete section ordering codes 56
  - Inlet section
    - Parts ordering codes ..... page 58
    - Dimensional data and hydraulic circuit 60
    - Main pressure relief valve 64
    - Solenoid operated unloading valve 64
    - Priority valve kit 65
    - Shut-off valve 65
  - Working section
    - Parts ordering code ..... page 66
    - Dimensional data and hydraulic circuit 72
    - Spool 73
    - "A" side spool positioner 75
    - "B" side spool control kit 80
    - Proportional hydraulic control 82
    - On/off solenoid control 84
    - Electrohydraulic controls
      - Performane data ..... page 85
      - Spool position sensor 87
      - Two-side electrohyraulic controls 88
      - One-side electrohydraulic control: "A" side 90
      - One-side electrohydraulic control: "B" side options 91
      - Complete one-side electrohydraulic control 92
    - Port valves 94
  - Outlet section
    - Parts ordering code ..... page 95
    - Dimensional data and hydraulic circuit 96
- **DPX100 High Flow**
  - Complete section ordering codes ..... page 98
  - Working section
    - Parts ordering code ..... page 101
    - Dimensional data and hydraulic circuit 104
    - Spool 105
    - One-side electrohydraulic control: "A" side 107
    - One-side electrohydraulic control: "B" side options 108
    - Complete one-side electrohydraulic control 109
- **DPX100 Low leak**
  - Complete section ordering codes ..... page 110
  - Working section
    - Parts ordering code ..... page 112
    - Dimensional data and hydraulic circuit 114
    - Spool 116
    - One-side electrohydraulic control: "A" side 118
    - One-side electrohydraulic control: "B" side options 118

Dimensional data and performance

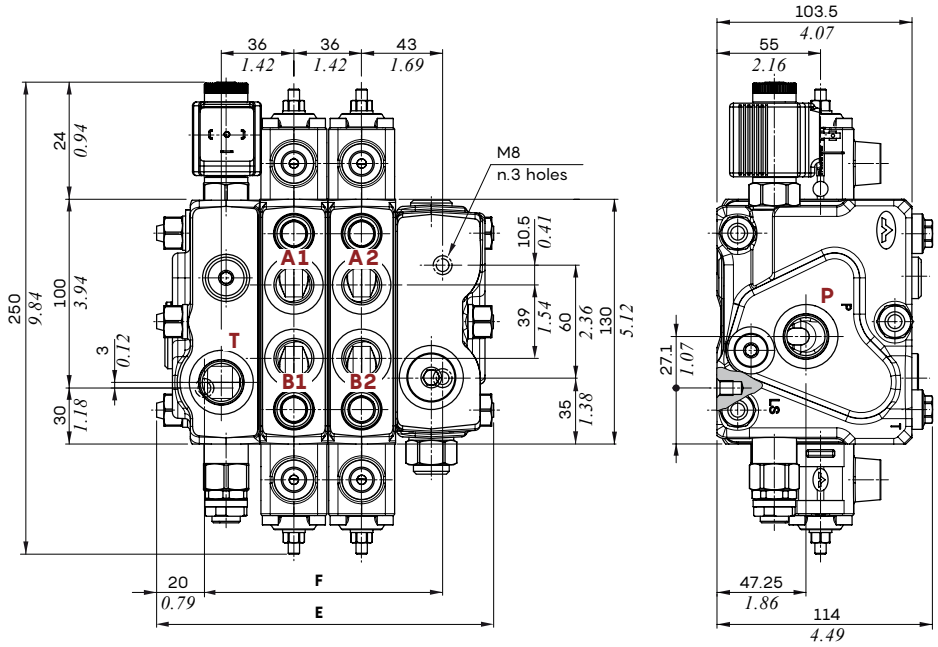

TYPE	E		F	
	mm	*in*	mm	*in*
DPX100/1	144	*5.67*	90.5	*3.56*
DPX100/2	180	*7.09*	126.5	*4.98*
DPX100/3	216	*8.50*	162.5	*6.40*
DPX100/4	252	*9.92*	198.5	*7.81*
DPX100/5	288	*11.34*	234.5	*9.23*
DPX100/6	324	*12.76*	270.5	*10.65*
DPX100/7	360	*14.17*	306.5	*12.07*
DPX100/8	396	*15.59*	342.5	*13.48*
DPX100/9	432	*17.01*	378.5	*14.90*
DPX100/10	468	*18.43*	414.5	*16.32*
DPX100/11	504	*18.43*	450.5	*17.74*
DPX100/12	540	*18.43*	486.5	*19.15*

P⇒T Pressure drop inlet compensator (margin pressure)

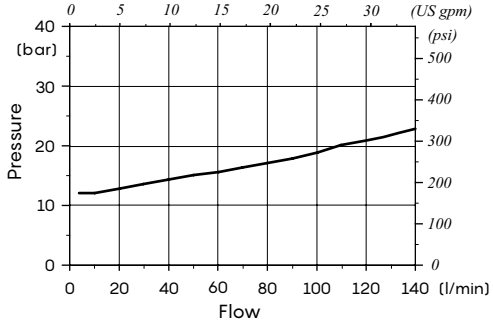

A(B)⇒T pressure drop (standard spool @ max.stroke)

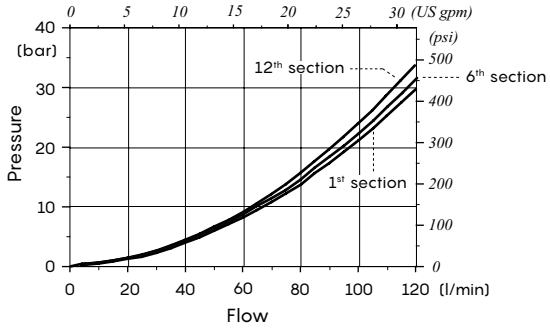

Hydraulic cuircuit

Configuration example with mechanical and hydraulic controls

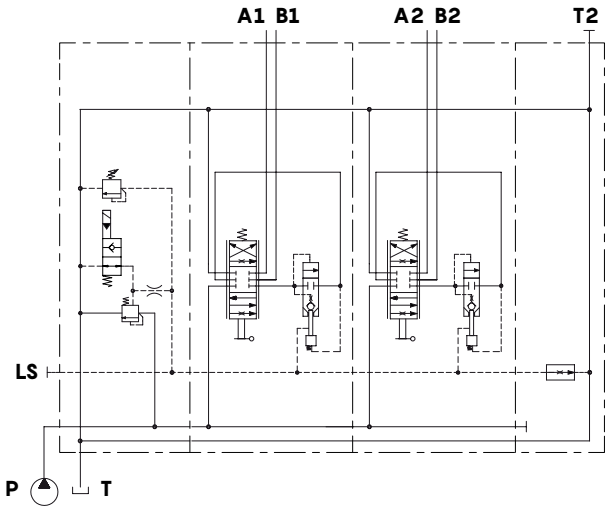

Open center circuit and lever control, with unloader valve, without port valve arrangement

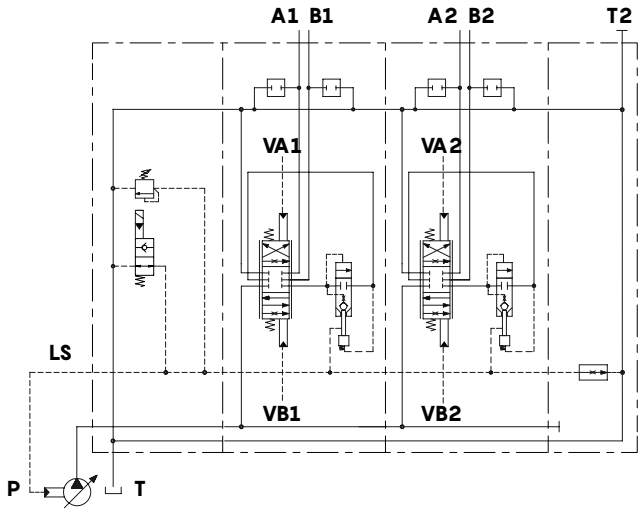

Closed center circuit and proportional hydraulic control, with unloader valve and port valve arrangement

Configuration example with electrohydraulic controls

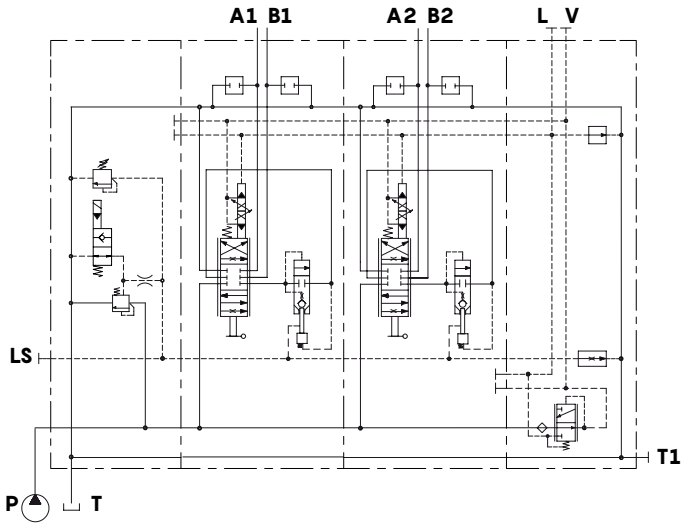

Open center circuit and one-side proportional electrohydraulic control with lever, with unloader valve, port valve arrangement and pressure reducing valve, internal pilot and drain

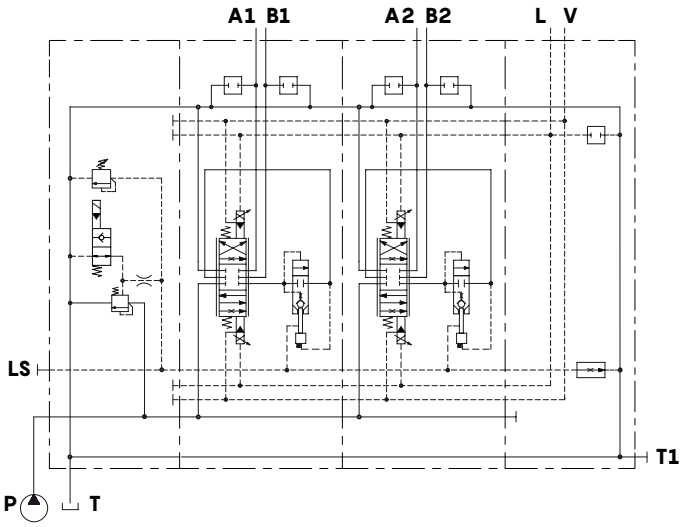

Open center circuit and two-side proportional electrohydraulic control, with unloader valve and port valve arrangement, without pressure reducing valve, external pilot and drain

Guide to configuration

Pressure peak reduction

Pressure peaks may occur in a port during normal machine operation, causing signal L.S. swings. If those pressure swings reach the inlet section or the pump compensators, they could cause an harsh and not confortable regulation, especially if they occur with high frequency.
The DPX Series directional valves, open and closed center ones, are available with inlet sections equipped with devices for L.S. signal peak reduction.

Standard configuration
Bidirectional restrictor on L.S. signal; it dampens the pressure peaks from L.S. line to inlet section compensator and vice versa.
SU option
Unidirectional restrictor on L.S. signal; it dampens the pressure peaks from L.S. line (and then from users) to inlet section compensator. It's recommended for applications that need soft start.
SO options
Unidirectional restrictor on L.S. signal; it dampens the pressure peaks from inlet section compensator to L.S. line. It's recommended for swings reduction occurred during normal operation.

Guide to configuration

High Pressure (HP) valve configuration

DPX100 Flow Sharing valves are available both for Standard and High pressure (HP) configuration.
The main difference between the two configurations is the max. reachable pressure.
In details:

DPX100

- Max. pressure on P inlet port and on A/B working ports = 300 bar - *4350 psi*

DPX100HP

- Max. pressure on P inlet port = 380 bar - *5550 psi*
- Max. pressure on A/B working ports = 420 bar - *6000 psi*

In addition to valve entirely configurated for Standard pressure or HP, a mixed configuration - Standard/HP - is available by combining only the sections needed.

Closed center type inlet section: one single solution for Standard and HP pressures.
Open center type inlet section: separate solutions for Standard and HP pressures.
Priority inlet secton: configuration available only for Standard pressure.
Working sections: separate solutions for Standard and HP pressures.
Outlet section: one single solution for Standard and HP pressures.

Example of entirely Standard Pressure valve configuration

DPX100/2/AM1(TGW3-175\ELN)/P-101(80\80)-8IMN.U3T/Q-101(80\80)-8IMN/RF-SAE-12VDC

- Std Pressure open center or Std pressure closed center inlet sections
- Std Pressure working sections
- Standard Pressure outlet section

Example of entirely High Pressure (HP) valve configuration

DPX100HP/2/AM1(TGW5-300\ELN)/P-101(80\80)-8IMN.U3T/Q-101(80\80)-8IMN/RF-SAE-12VDC

- HP open center inlet section or Std Pressure closed center inlet section
- HP working sections
- Standard Pressure outlet section

Example of mixed - Standard/HP - valve configuration

DPX100/2/AM1(TGW3-175\ELN)/P-101(80\80)-8IMN.U3T/HP-Q-101(80\80).U3(360)-8IMN/RF-SAE-12VDC

- Std Pressure open center or Std pressure closed center inlet sections
- Std Pressure working section
- HP working section
- Standard Pressure outlet section

Guide to configuration

High Flow (HF) valve configuration

It needs to flow up to 120 l/min *(32 US gpm)* , the DPX100 valve can be configured with up to 4 HF (High Flow) working sections.
In addition to an entirely for Standard flow or High Flow configuration, a mixed configuration — Standard/HF — is available by combining only the sections needed (the number of HF sections is always limited to 4).
In this case, for hydraulic requirements, the HF sections must be positioned just downstream to the inlet.
HF sections are suitable for use both in Standard Pressure and High Pressure (HP) valves.
The inlet flow rate must not be less than 140 l/min *(37 US gpm)*.

Example of entirely High Flow (HF) valve configuration, for Standard Pressure

DPX100HF/4/AM1(TGW5-300\ELN)/P-E101(120\120)-8IMNF3.U3(100)/P-E101(120\120)-8IMNF3.U3(100)/

Std Pressure open center or Std pressure closed center inlet section, with SAE12 P port

HF working sections

P-E101(120\120)-8IMNF3.U3(100)/P-E101(120\120)-8IMNF3.U3(100)/RF-SAE-12VDC

HF working sections

Standard Pressure outlet section

Example of entirely High Flow (HF) valve configuration, for High Pressure (HP)

DPX100HP/4/AM1(TGW5-300\ELN)/HF-P-E101(120\120)-8IMNF3.U3(320)/HF-P-E101(120\120)-8IMNF3.U3(320)

HP Pressure open center or Std pressure closed center inlet section, with SAE12 P port

HF working sections

/HF-P-E101(120\120)-8IMNF3.U3(320)/HF-P-E101(120\120)-8IMNF3.U3(320)/RF-SAE-12VDC

HF working sections

Standard Pressure outlet section

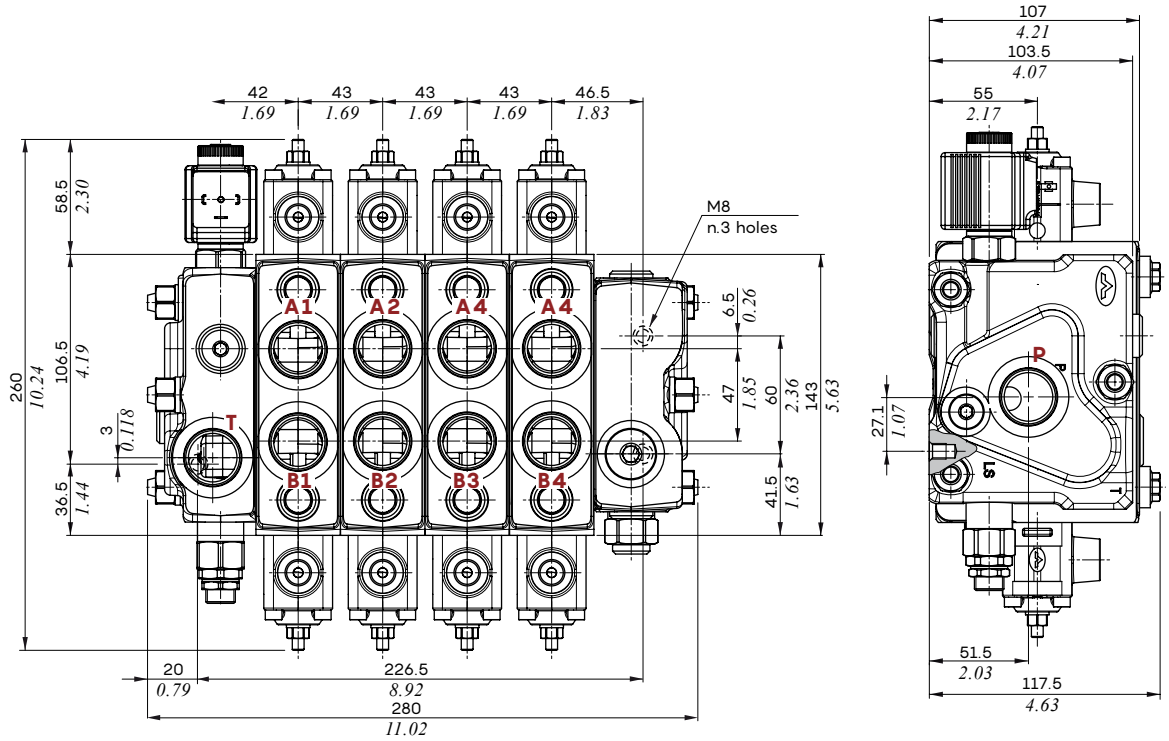

High Flow (HF) valve configuration

Example of mixed - Standard/HF - valve configuration

DPX100/4/AM1(TGW5-300\ELN)/HF-P-E101(120\120)-8IMNF3.U3(100)/HF-P-1E01(120\120)-8IMNF3.U3(100)/

Std Pressure open center or Std pressure closed center inlet section, with SAE12 P port

HF working sections

P-E101(80\80)-8IMNF3.U3(100)/P-E101(80\80)-8IMNF3.U3(100)/RF-BSP34(PTA1B1A2B2)38(A3B4A4B4)-SAE-12VDC

Standard setting working sections

Standard Pressure outlet section

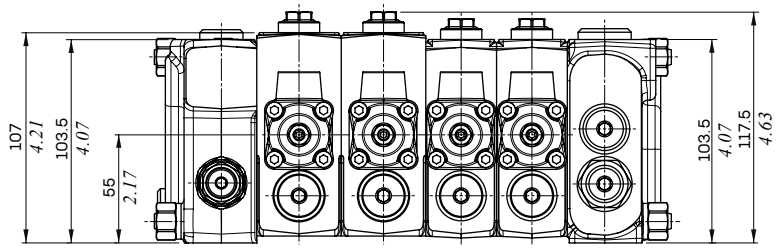

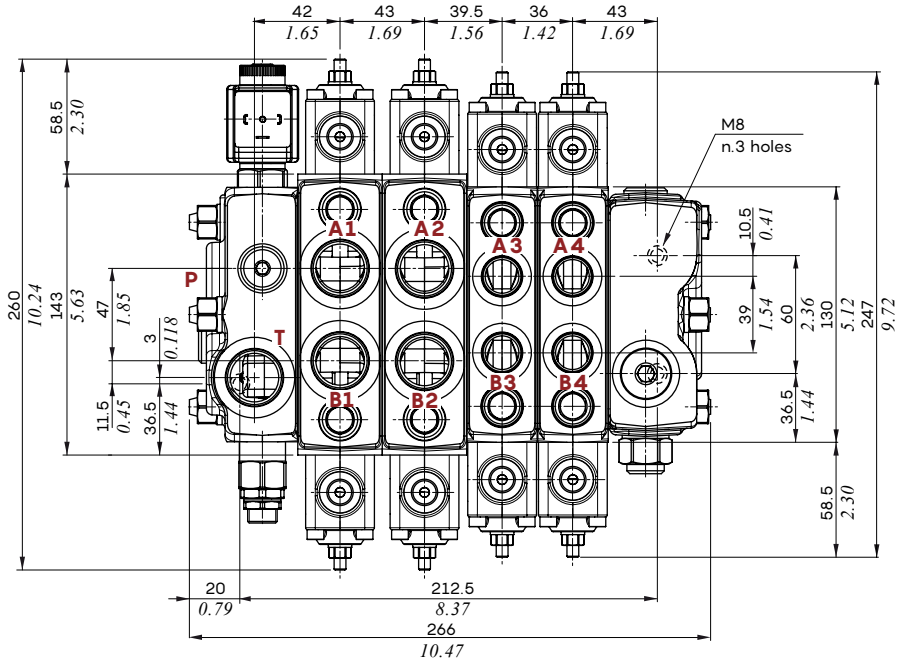

Guide to configuration

Directional valve with Low Leak working sections

The DPX100 directional valve can be configured with working sections fitted with a Low Leak valve, and it can be used in all applications that require reduced leakage, such as: Tractors, Boom Mowers, Backhoe Loaders, Graders, Mini-excavatorsi, Compact Wheel Loaders, Fork Lifts.

The working sections have the following features:

- Dedicated cast iron body to integrate hydraulic pilot Low Leak valves.
- Port valves arrangement.
- Capability to integrate the floating circuit with hydraulic release of the Low Leak valve.
- They are configurable with standard proportional hydraulic controls and dedicated electrohydraulic controls.
- Dedicated spools to Low Leak function.
- Compatible with inlet and outlet sections in the catalogue.

Low Leak sections ca be assembled with Standard, HP or HF working sections

In a DPX100 valve with Low Leak sections, all working sections are configured as Righ Inlet referred to the inlet section; the assignment of port name is the opposite type to the standard valve.

Example of directional valve with Low Leak sections (Right Inlet)

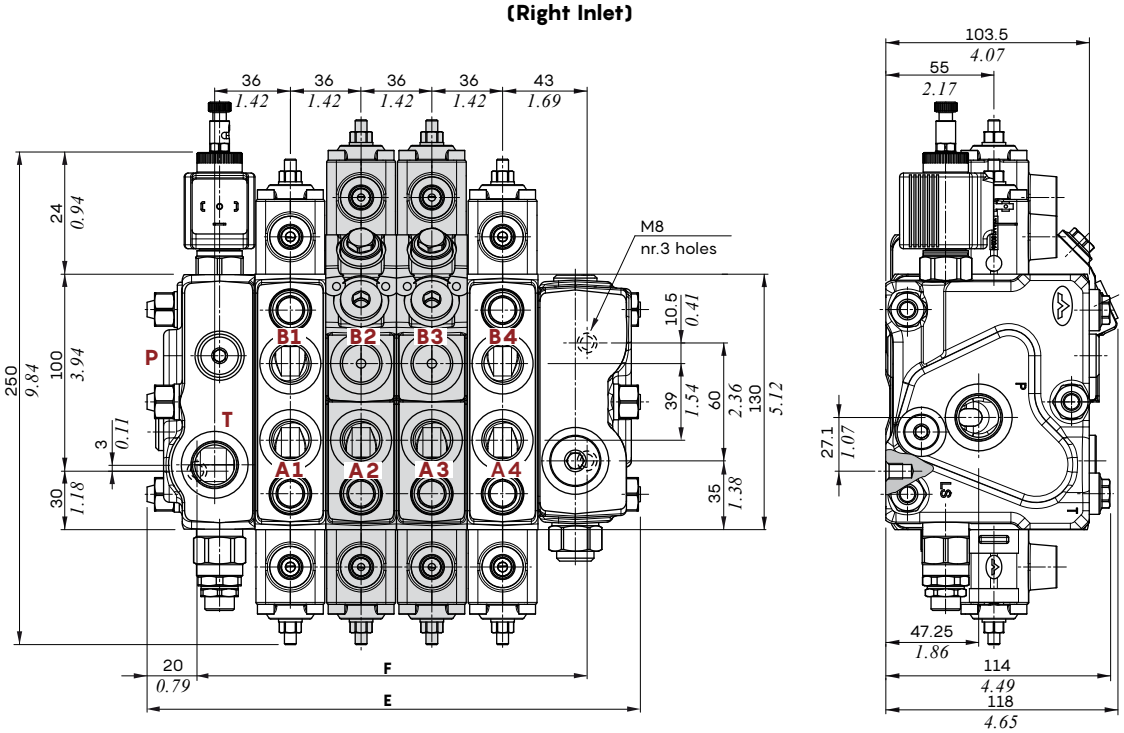

Example of standard directional valve (Left Inlet)

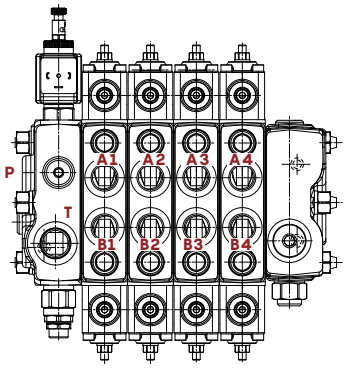

TYPE	E		F	
	mm	*in*	mm	*in*
DPX100/1	144	*5.67*	90.5	*3.56*
DPX100/2	180	*7.09*	126.5	*4.98*
DPX100/3	216	*8.50*	162.5	*6.40*
DPX100/4	252	*9.92*	198.5	*7.81*
DPX100/5	288	*11.34*	234.5	*9.23*
DPX100/6	324	*12.76*	270.5	*10.65*

TYPE	E		F	
	mm	*in*	mm	*in*
DPX100/7	360	*14.17*	306.5	*12.07*
DPX100/8	396	*15.59*	342.5	*13.48*
DPX100/9	432	*17.01*	378.5	*14.90*
DPX100/10	468	*18.43*	414.5	*16.32*
DPX100/11	504	*19.84*	450.5	*17.74*
DPX100/12	540	*21.26*	486.5	*19.15*

Directional valve with Low Leak working sections

Valve with hydraulic controls

The Low Leak working sections can be assembledin any point of the valve between the inlet section and the outlet section.

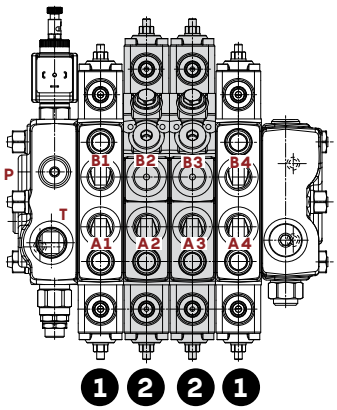

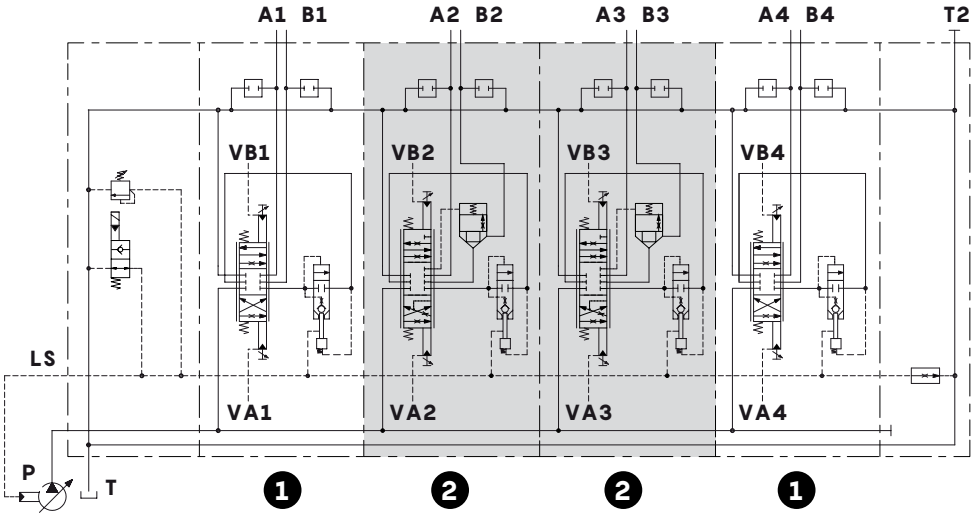

1: Hydraulic control working section in Right inlet configuration
2: Low Leak working section with hydraulic control (Righ Inlet)

Valve with electrohydraulic controls

The Low Leak sections can only be configured with one-side electro-hydraulic controls.
These sections can be mounted at any point of the valve considering that any electro-hydraulic standard sections present upstream must also have one-side controls and be configured in Right Inlet version.
The downstream standard sections, always in Right Inlet version, can be configured with both one-side and two-side controls; the sections with two-side controls must be positioned just before the outlet section.

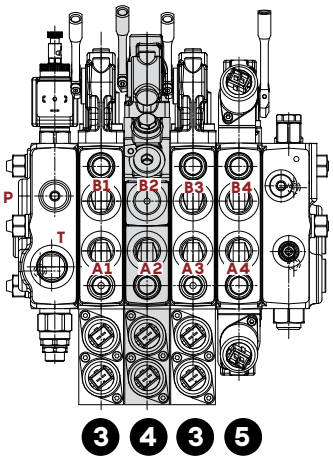

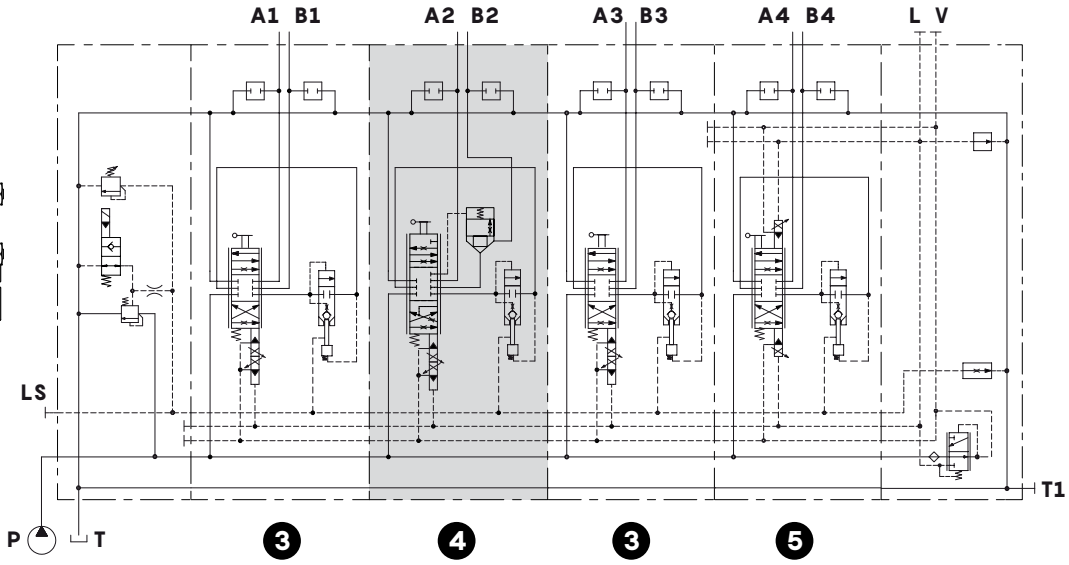

3: One-side electrohydraulic control working section in Right inlet configuration
4: Low Leak working section with one-side electrohydraulic control (Right Inlet)
5: Two-side electrohydraulic control working section in Right inlet configuration

Complete section ordering codes

A Mechanical-hydraulic controls configuration:

Nr. of working sections

DPX100/3/AM1(TGW3-175\ELN)/P-101(80\80)-8L.U1(100)U2(100)/HP-Q-E101(80\80)-8IMN/

Standard Pressure valve — 1A — 1B — 2A — 2B

P-S102(60\60)-8ES3.U3T/RF-.....-12VDC

2A — 3 — 4 — 5

B Electrohydraulic controls configuration:

DPX100/3/AM1(TGW3-175\ELN)/QZ-E101(80\80)-8EZ3LQF3/HPE-E101(80\80)-8EB3TF3.U1(100)U2(100)/

Standard Pressure valve — 1A — 1B — 2A — 2B

RDR03-.....-12VDC

3 — 4 — 5

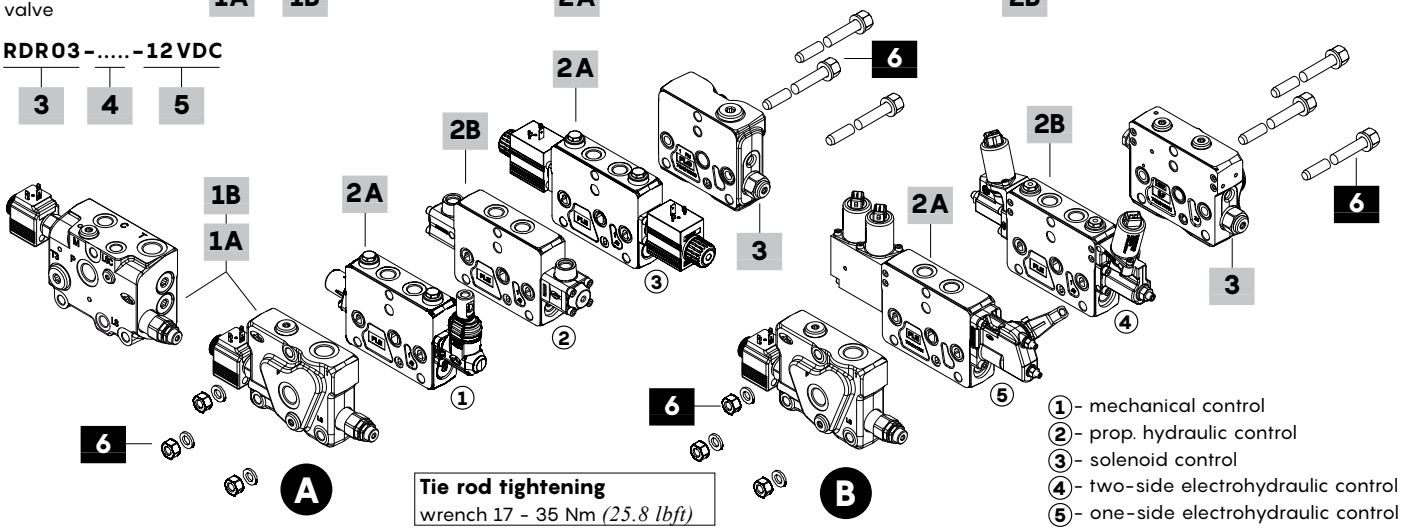

1A Std pressure inlet section *

Open Center circuit

TYPE: **DPX100/AM1(TGW3-175\ELN)-SAE-12VDC**
CODE: 640205016S DESCRIPTION: With compensator, press. relief valve and unloader valve, with P-T-LS ports (LS plugged)
TYPE: **DPX100/AM1(TGW3-175\ELN)-SAE12-SAE-12VDC**
CODE: 640205030 DESCRIPTION: As previous one with SAE12 P and T ports
TYPE: **DPX100/AM1(SO\TGW3-175\ELN)-SAE-12VDC**
CODE: 640205007S DESCRIPTION: As first one with non-return flow limiter from inlet section to working section and by-pass valve
TYPE: **DPX100/AM1(SU\TGW3-175\ELN)-SAE-12VDC**
CODE: 640205017S DESCRIPTION: With non-return flow limiter from working section to inlet section and by-pass valve
TYPE: **DPX100/APF4\TGW3-175\VP-D(1.2)-SB10-Q40-SAE**
CODE: 640205302S DESCRIPTION: **Designed for steering**, compensator, priority and pressure relief valves, with P-T-T3-LS-M-C-LSC ports (T-M-LS plugged). Needs special tie rods

Closed Center circuit

TYPE: **DPX100/AN1(TGW3-175\ELN)-SAE-12VDC**
CODE: 640205021S DESCRIPTION: Without compensator, with press. relief valve and unloader valve, with P-T-LS ports
TYPE: **DPX100/AN1(TGW3-175\ELN)-SAE12-12VDC**
CODE: 640205032S DESCRIPTION: As previous one with SAE12 P and T ports Not available for High Pressure valve configuration
TYPE: **DPX100/AN1(SO\TGW3-175\ELN)-SAE-12VDC**
CODE: 640205009S DESCRIPTION: As first one (Closed Center) with non-return flow limiter from inlet section to working section and by-pass valve

1A Std pressure inlet section *

TYPE: **DPX100/AN1(SU\TGW3-175\ELN)-SAE-12VDC**
CODE: 640205022S DESCRIPTION: With non-return flow limiter from working section to inlet section and by-pass valve
TYPE: **DPX100/APFS4\TGW3-175\VR5-VP-D(1.2)-SB10-Q40\SB25-LSF(NOFC)\ESO22N-SAE-12VDC**
CODE: 640205300S
DESCRIPTION: **Designed for steering**, with flushing valve (stand-by 25 bar - *360 psi*), priority, shut-off and pressure relief valves, P-T-T3-LS-M-C-LSC ports (T3-M plugged). Needs special tie rods
Not available for High Pressure valve configuration

1B High Pressure inlet section *

Open Center circuit

TYPE: **DPX100HP/AM1(TGW5-350/ELN)-SAE-12VDC**
CODE: 640205023S DESCRIPTION: With compensator, press. relief valve and unloader valve, with P-T-LS ports (LS plugged)
TYPE: **DPX100HP/AM1(TGW5-350/ELN)-SAE12-12VDC**
CODE: 640205031S DESCRIPTION: As previous one with SAE12 P and T ports
TYPE: **DPX100HP/AM1(SO/TGW5-350/ELN)-SAE-12VDC**
CODE: 640205014S DESCRIPTION: As first one with non-return flow limiter from inlet section to working section and by-pass valve
TYPE: **DPX100HP/AM1(SU/TGW5-350/ELN)-SAE-12VDC**
CODE: 640205025S DESCRIPTION: With non-return flow limiter from working section to inlet section and by-pass valve

Closed Center circuit

Refer to "Std pressure" inlet sections

NOTE (*): Codes are referred to **UN-UNF** thread.

Complete section ordering codes

2A Std pressure working section *

Mechanical control
TYPE: **DPX100/Q-101(80\80)-8L-SAE**
CODE: 640115001S
DESCRIPTION: Lever control without port valve arrangement
TYPE: **DPX100/P-101(80\80)-8L.U3T-SAE**
CODE: 640105056S
DESCRIPTION: As previous one with port valve arrangement
Proportional hydraulic control
TYPE: **DPX100/Q-E101(80\80)-8IMN-SAE**
CODE: 640155002S
DESCRIPTION: Without port valve arrangement
TYPE: **DPX100/P-E101(80\80)-8IMN.U3(100)-SAE**
CODE: 640105057S
DESCRIPTION: With antishock port valves
On/off solenoid control
TYPE: **DPX100/Q-S102(60\60)-8ES3-SAE-12VDC**
CODE: 640155003S
DESCRIPTION: Without port valve arrangement
TYPE: **DPX100/P-S102(60\60)-8ES3.U3(100)-SAE-12VDC**
CODE: 640105064S
DESCRIPTION: With antishock port valves
Two-side proportional electrohydraulic control
TYPE: **DPX100/QE-E101(80\80)-8EB3TF3-SAE-12VDC**
CODE: 640105058S
DESCRIPTION: With spool stroke limiter, without port valve arrang.
TYPE: **DPX100/PE-E101(80/80)-8EB3TF3.U3T-SAE-12VDC**
CODE: 64010509S
DESCRIPTION: As previous one with port valves arrangement
TYPE: **DPX100/PE-E101(80\80)-8EB3TF3.U3(100)-SAE-12VDC**
CODE: 640105060S
DESCRIPTION: As previous one with antishock port valves
One-side proportional electrohydraulic control
TYPE: **DPX100/QZ-E101(80\80)-8EZ3LQF3-SAE-12VDC**
CODE: 640105061SV
DESCRIPTION: With spool stroke limiter, without port valve arrang.
TYPE: **DPX100/PZ-E101(80\80)-8EZ3LQF3.U3T-SAE-12VDC**
CODE: 640105062S
DESCRIPTION: As previous one with port valve arrangement
TYPE: **DPX100/PZ-E101(80\80)-8EZ3LQF3.U3(100)-SAE-12VDC**
CODE: 640105063S
DESCRIPTION: As previous one with antishock port valves

6 Assembling kit

CODE	DESCRIPTION	CODE	DESCRIPTION
Standard tie rods: for M and N type inlet sections			
5TIR110145	For 1 section valve	5TIR110359	For 7 section valve
5TIR110179	For 2 section valve	5TIR110397	For 8 section valve
5TIR110215	For 3 section valve	5TIR110431	For 9 section valve
5TIR110252	For 4 section valve	5TIR110467	For 10 section valve
5TIR110289	For 5 section valve	5TIR110503	For 11 section valve
5TIR110323	For 6 section valve	5TIR110541	For 12 section valve
Special tie rods: for PFS type inlet section			
5TIR110163	For 1 section valve	5TIR110382	For 7 section valve
5TIR110200	For 2 section valve	5TIR110417	For 8 section valve
5TIR110238	For 3 section valve	5TIR110454	For 9 section valve
5TIR110273	For 4 section valve	5TIR110487	For 10 section valve
5TIR110307	For 5 section valve	5TIR110526	For 11 section valve
5TIR110344	For 6 section valve	5TIR110561	For 12 section valve

2B High Pressure working section *

Mechanical control
TYPE: **DPX100HP/Q-101(80\80)-8L-SAE**
CODE: 640115008S
DESCRIPTION: Lever control without port valve arrangement
TYPE: **DPX100HP/P-101(80\80)-8L.U3T-SAE**
CODE: 640105009S
DESCRIPTION: As previous one with port valve arrangement
Proportional hydraulic control
TYPE: **DPX100HP/Q-E101(80\80)-8IMN-SAE**
CODE: 640115017S DESCRIPTION: Without port valve arrang.
TYPE: **DPX100HP/P-E101(80\80)-8IMN.U3(320)-SAE**
CODE: 640105021S DESCRIPTION: With antishock port valves
On-off solenoid control
TYPE: **DPX100HP/Q-S102(60\60)-8ES3-SAE-12VDC**
CODE: 640115018S DESCRIPTION: Without port valve arrang.
TYPE: **DPX100HP/P-S102(60\60)- 8ES3.U3(320)-SAE-12VDC**
CODE: 640105022S DESCRIPTION: With antishock port valves
Two-side proportional electrohydraulic control
TYPE: **DPX100HP/QE-E101(80\80)-8EB3TF3-SAE-12VDC**
CODE: 640115019S
DESCRIPTION: With stroke limiter, without port valve arrangement
TYPE: **DPX100HP/PE-E101(80\80)-8EB3TF3.U3T-SAE-12VDC**
CODE: 640105028S
DESCRIPTION: As previous one with port valve arrangement
TYPE: **DPX100HP/PE-E101(80\80)-8EB3TF3.U3(320)-SAE-12VDC**
CODE: 640105023S
DESCRIPTION: As previous one with antishock port valves
One-side proportional electrohydraulic control
TYPE: **DPX100HP/QZ-E101(80\80)-8EZ3LQF3-SAE-12VDC**
CODE: 640115020S
DESCRIPTION: With stroke limiter, without port valve arrangement
TYPE: **DPX100HP/PZ-E101(80\80)-8EZ3LQF3.U3T-SAE-12VDC**
CODE: 640105024S
DESCRIPTION: As previous one with port valve arrangement
TYPE: **DPX100HP/PZ-E101(80\80)-8EZ3LQF3.U3(320)-SAE-12VDC**
CODE: 640105025S
DESCRIPTION: As previous one with port valve arrangement

3 Outlet section *

Outlet section is the same type for standard and High Pressure valve
For mechanical, proportional hydraulic or solenoid configuration
TYPE: **DPX100/RF-SAE** CODE: 640305003S
DESCRIPTION: With bleed valve and upper T2 port (plugged)
TYPE: **DPX100/RF(04)-SAE** CODE: 640305011S
DESCRIPTION: Bleed valve, upper T2, side P1-T1-LS1-M1 ports (plugged)
For electrohydraulic or mixed configuration
TYPE: **DPX100/RDN-NOTAP(VL)-SAE** CODE: 640305002S
DESCRIPTION: Without pressure reducing valve, external V pilot and L drain ports, with Bleed valve and side T1 port (plugged)
TYPE: **DPX100/RDR-SAE** CODE: 640305006S
DESCRIPTION: With pressure reducing valve and Bleed valve, internal pilot and drain (V-L plugged ports), side T1 port (plugged)
TYPE: **DPX100/RDR(03)-SAE** CODE: 640305007S
DESCRIPTION: With pressure reducing valve and Bleed valve, internal V pilot and L drain ports (plugged), side T1-P1-LS1 ports (plugged)
Note: for sections with different port arrangement please contact Sales Dpt.

4 Valve threading

Only specify if it is different from **BSP** standard (see page 7).

5 Voltage

Specify the voltage of electric devices.

NOTE (*): Codes are referred to **UN-UNF** thread.

Inlet section part ordering codes

Valve setting (bar)

DPX100 / A M1 (TGW3 - 175 \ ELN) - SAE - 12VDC

1A 1B 2 3 4 5

DPX100:
Standard Pressure section
DPX100HP:
High Pressure section

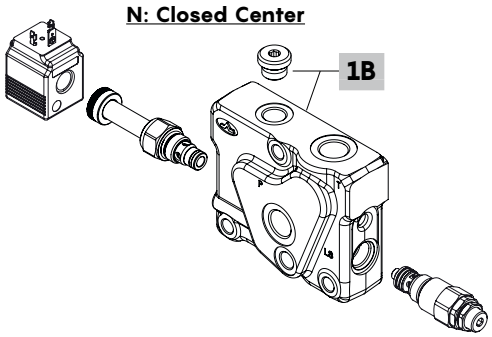

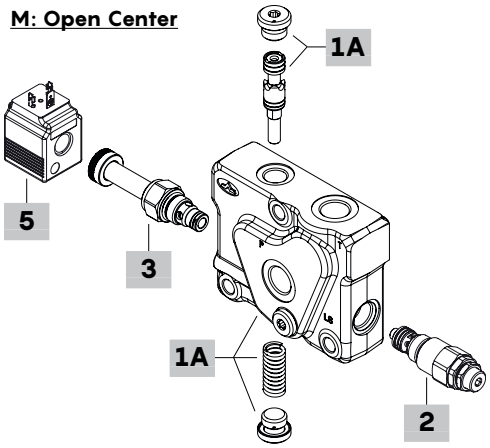

1A Std pressure inlet section kit * page 60

Open Center circuit
TYPE: **DPX100/AM1-SAE/EL** CODE: YFIA104509S
DESCRIPTION: With compensator, P-T-LS ports (LS plugged), arranged for unloader valve
TYPE: **DPX100/AM1-SAE12/EL** CODE: YFIA104518S
DESCRIPTION: As previous one with SAE12 P and T ports
TYPE: **DPX100/AM1(SU)-SAE/EL** CODE: YFIA104510S
DESCRIPTION: As first one with non return flow limiter from working section to inlet section and by-pass valve
TYPE: **DPX100/AM1(SO)-SAE/EL** CODE: YFIA104511S
DESCRIPTION: As previous one with non return flow limiter from inlet section to working section and by-pass valve
Closed Center circuit
TYPE: **DPX100/AN1-SAE/EL** CODE: YFIA104512S
DESCRIPTION: Without compensator, with P-T-LS ports, arranged for unloader valve
TYPE: **DPX100/AN1-SAE12/EL** CODE: YFIA104520S
DESCRIPTION: As previous one with SAE12 P and T ports
Not available for High Pressure configuration
TYPE: **DPX100/AN1(SU)-SAE/EL** CODE: YFIA104513S
DESCRIPTION: As first one (Closed Center) with non return flow limiter from working section to inlet section and by-pass valve
TYPE: **DPX100/AN1(SO)-SAE/EL** CODE: YFIA104514S
DESCRIPTION: As previous one with non return flow limiter from inlet section to working section and by-pass valve

2 Main pressure relief valve page 64

Valves standard setting is referred to 5 l/min *(1.3 US gpm)* flow.

TYPE	CODE	DESCRIPTION
(TGW2-80)	0MC09002000	Range 10-120 bar *(145-1750 psi)* std setting 80 bar *(1160 psi)*
(TGW3-175)	0MC09002001	Range 40-220 bar *(580-3200 psi)* std setting 175 bar *(2550 psi)*
(TGW4-250)	0MC09002002	Range 200-350 bar *(2900-5100 psi)* std setting 250 bar *(3600 psi)*
(TGW5-300)	0MC09002003	Range 290-385 bar *(4200-5600 psi)* std setting 300 bar *(4350 psi)*
SV	XTAP524340D	Relief valve blanking plug

1B High pressure inlet section kit * page 60

Open Center circuit
TYPE: **DPX100HP/AM1-SAE/EL** CODE: YFIA104515S
DESCRIPTION: With compensator, P-T-LS ports (LS plugged) arranged for unloader valve
TYPE: **DPX100HP/AM1-SAE12/EL** CODE: YFIA104519S
DESCRIPTION: As previous one with SAE12 P and T ports
TYPE: **DPX100HP/AM1(SU)-SAE/EL** CODE: YFIA104516S
DESCRIPTION: As first one with non return flow limiter from working section to inlet section and by-pass valve
TYPE: **DPX100HP/AM1(SO)-SAE/EL** CODE: YFIA104517S
DESCRIPTION: As previous one with non return flow limiter from inlet section to working section and by-pass valve
Closed Center circuit
Refer to "Std pressure" inlet sections

3 Solenoid operated unloading valve page 64

TYPE	CODE	DESCRIPTION
ELN	0EF08002000	Without emergency override
ELV	0EF08002003	With screw type emergency override
ELP	0EF08002002	With push-button emergency override
ELT	0EF08002004	With "twist & push" emergency override
LT	XTAP510320	Unloading valve blanking plug

4 Section threading

Only specify if it is different from **BSP** standard (see page 7)

5 Coil

TYPE	CODE	DESCRIPTION
12VDC	4SLE001200A	12VDC **BER** type coil, ISO4400 connector

For complete available coils list see page 160.

NOTE (*): Codes are referred to **UN-UNF** thread.

Inlet section part ordering codes

Valve setting (bar) — Priority valve stand-by (bar) — Steering max. flow — Compensator stand-by (bar)

A **DPX100 / APF4 \ TGW3-175 \ VR5 - VP-D(1.2) - SB10 - Q40 \ SB14 - SAE**

1 2 1 3 1 6

DPX100: Standard Pressure section

B **DPX100 / APFS4 \ TGW3-175 \ VR5 - VP-D(1.2)-SB10-Q40 \ SB25-LSF(NOFC) \ ESO22N - SAE - 12VDC**

1 2 1 3 1 4 6 5

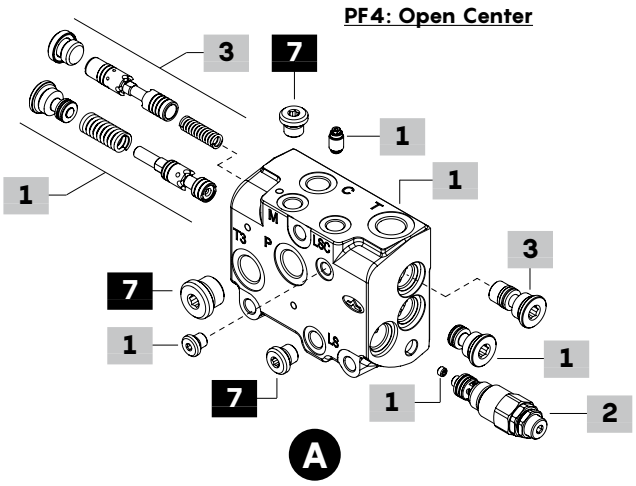

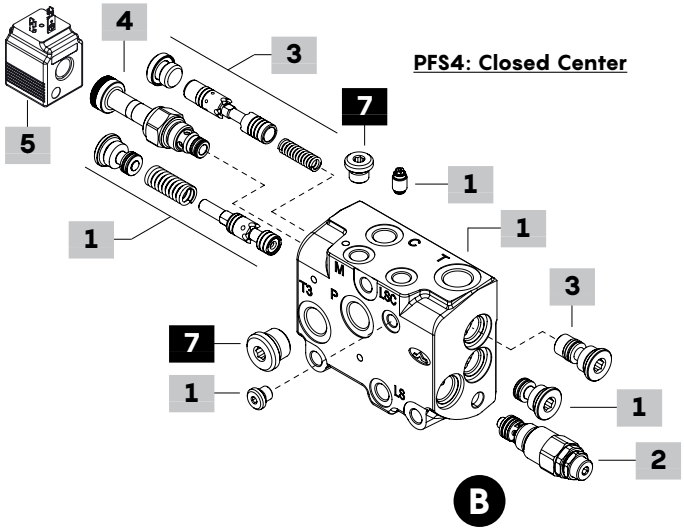

1 Inlet section kit * page 62

Following sections are suitable only for Standard Pressure valve

Open Center circuit

TYPE: **DPX100/APF4-SAE** CODE: YFIA104572S

DESCRIPTION: With compensator, P-T-T3-LS-M-C-LSC ports

Closed Center circuit

TYPE: **DPX100/APFS4-SAE** CODE: YFIA104573S

DESCRIPTION: With flushing valve (stand-by 25 bar - *360 psi*), shut-off valve arrangement and P-T-T3-LS-M-C-LSC ports

TYPE: **DPX100/APS4-SAE** CODE: YFIA104574S

DESCRIPTION: Without compensator (seat plugged), shut-off valve arrangement and P-T-T3-LS-M-C-LSC ports

2 Main pressure relief valve page 64

See previous page

3 Priority valve kit page 65

TYPE	CODE	DESCRIPTION
Regulated flow = 40 l/min *(10.5 US gpm)*		
D(1.2)-SB10-Q40-FPM	5CAS314058AV	Stand-by (margin pressure) 10 bar *(145 psi)*
D(1.2)-SB07-Q40-FPM	5CAS314058BV	Stand-by (margin pressure) 7 bar *(100 psi)*

4 Solenoid operated shut-off valve page 65

TYPE	CODE	DESCRIPTION
ESO22N	0EC08002031	Without emergency override
ESO22P	0EC08002033	With push-button emergency override
ESO22V	0EC08002034	With screw type emergency override
ESO22T	0EC08002035	With "twist & push" emergency override
EST	XTAP510320	Valve blanking plug

5 Coil

TYPE	CODE	DESCRIPTION
12VDC	4SLE001200A	12VDC **BER** type coil, ISO4400 connector

For complete available coils list see page 160.

6 Section threading

Only specify if it is different from **BSP** standard (see page 7)

8 Plugs *

CODE	DESCRIPTION
3XTAP817130	SAE6 plug, nr.1 for PFS section, nr.2 for PF section
3XTAP826160	SAE10 plug, nr.1

NOTE (*): Codes are referred to **UN-UNF** thread.

Inlet section

Dimensions and hydraulic circuit

Example of M Open Center section, standard pressure type

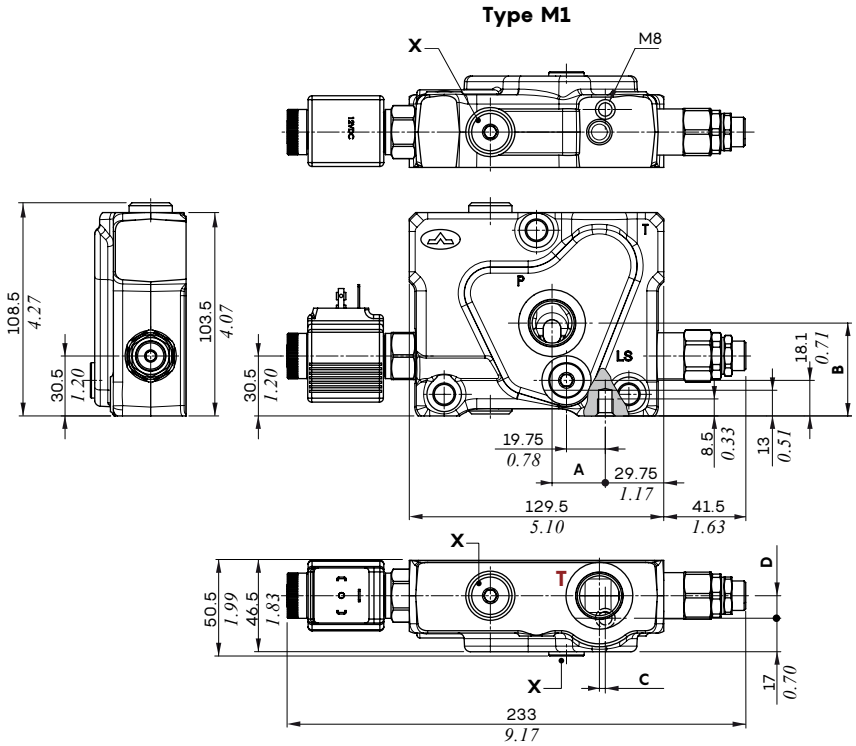

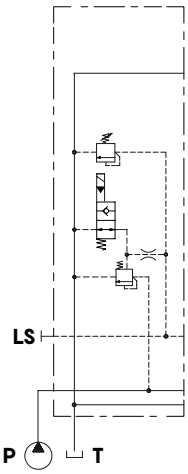

Wrenches and tightening torques

X = allen wrench 6 - 24 Nm *(17.7 lbft)*

Y = allen wrench 4 - 9.8 Nm *(7.2 lbft)*

NOTE: for valves wrench and torque see related pages

INLET SECTION TYPE		P inlet port				T outlet port			
		A		B		C		D	
		mm	*in*	mm	*in*	mm	*in*	mm	*in*
Standard pressure	**Standard thread**	27.1	*1.07*	47.25	*1.86*	3	*0.118*	11.5	*0.45*
High pressure (HP)	**Standard thread**	27.1	*1.07*	51.5	*2.03*	3	*0.118*	11.5	*0.45*
	SAE12 thread	28	*1.10*	52.5	*2.07*	3	*0.118*	6.5	*0.26*

Type M1(SO) or M1(SU)

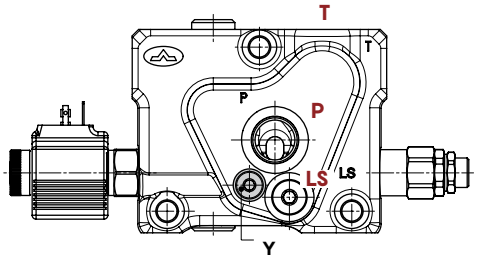

Type M1(SU)

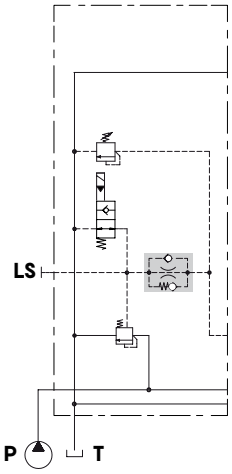

Type M1(SO)

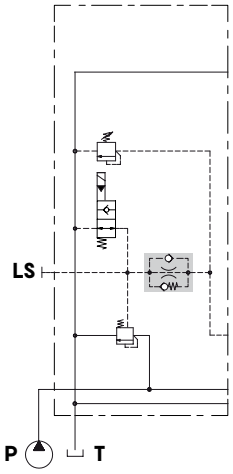

Dimensions and hydraulic circuit

Example of N Closed Center section

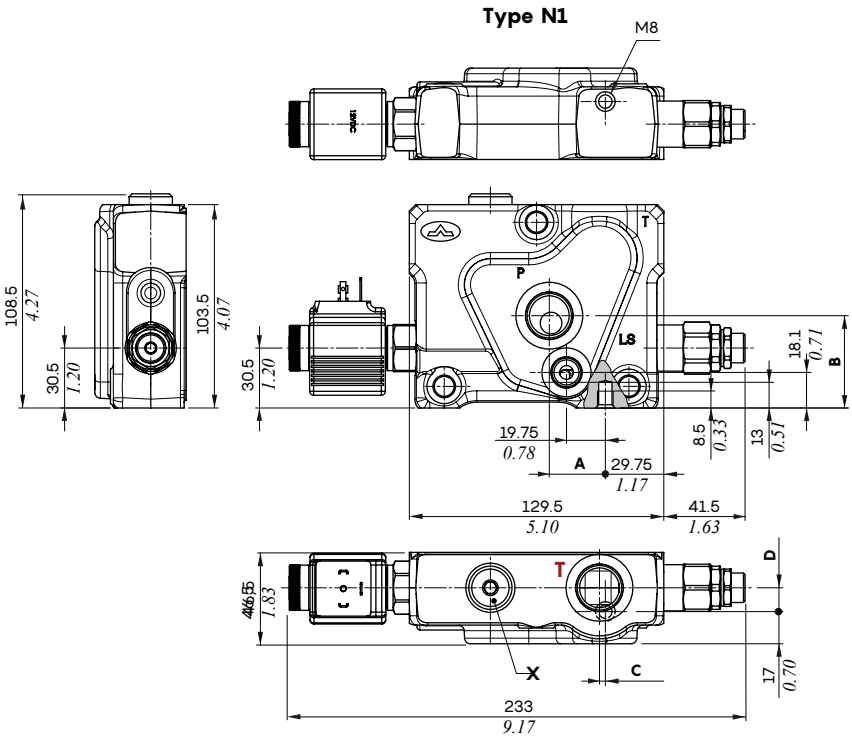

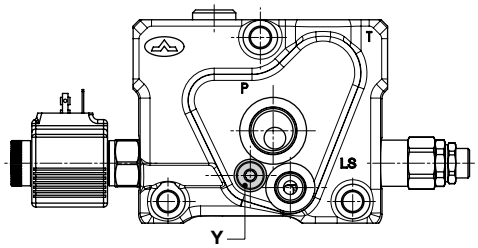

Wrenches and tightening torques

X = allen wrench 6 - 24 Nm *(17.7 lbft)*

Y = allen wrench 5 - 9.8 Nm *(7.2 lbft)*

NOTE: for valves wrench and torque see related pages

INLET SECTION TYPE	P inlet port				T outlet port			
	A		B		C		D	
	mm	*in*	mm	*in*	mm	*in*	mm	*in*
Standard thread	26	*1.02*	44.5	*1.75*	3	*0.118*	11.5	*0.45*
SAE12 thread	27.4	*1.08*	52.5	*2.07*	3	*0.118*	6.5	*0.26*

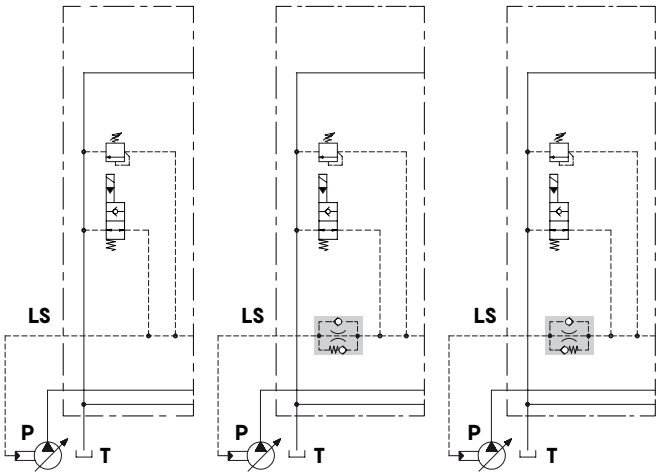

Inlet section

Dimensions and hydraulic circuit

PF4 Open Center section, with priority valve

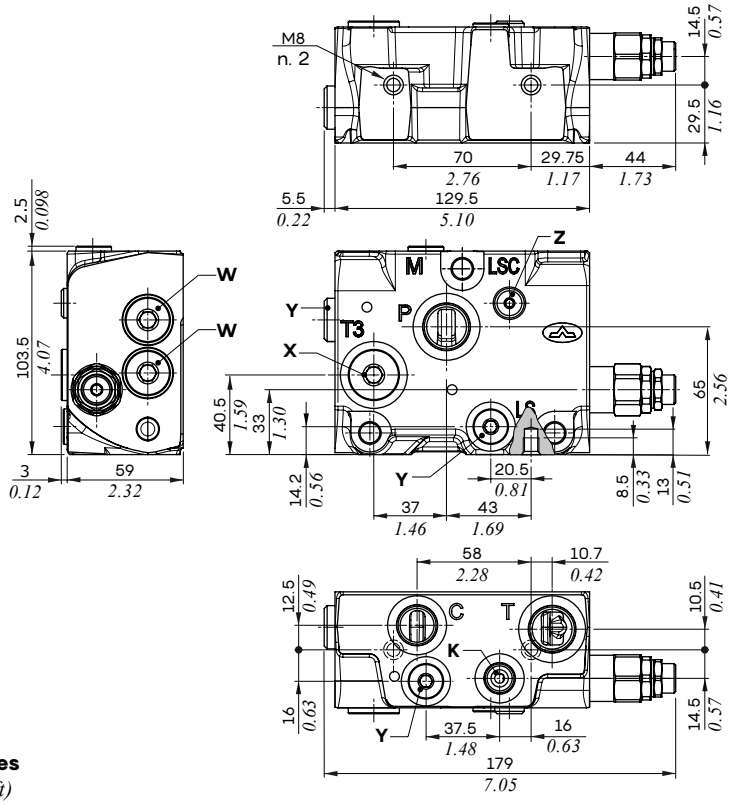

Wrenches and tightening torques

K = allen wrench 5 - 9.8 Nm *(7.2 lbft)*
X = allen wrench 8 - 24 Nm *(17.7 lbft)*
Y = allen wrench 6 - 24 Nm *(17.7 lbft)*
Z = allen wrench 4 - 9.8 Nm *(7.2 lbft)*
W = allen wrench 8 - 24 Nm *(17.7 lbft)*
NOTE: for valves wrench and torque see related pages

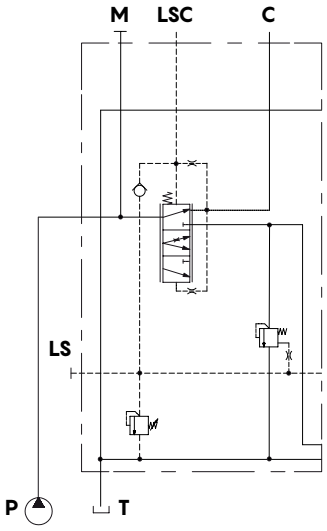

Dimensions and hydraulic circuit

PFS4 Closed Center section, with priority valve and shut-off valve arrangement

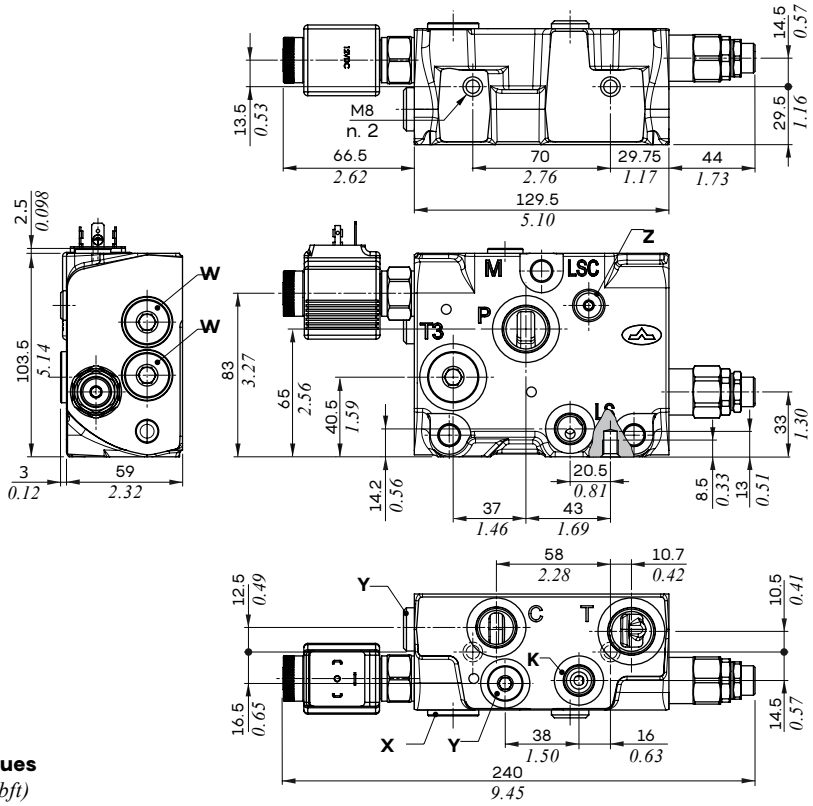

Wrenches and tightening torques

K = allen wrench 5 - 9.8 Nm *(7.2 lbft)*
X = allen wrench 8 - 24 Nm *(17.7 lbft)*
Y = allen wrench 6 - 24 Nm *(17.7 lbft)*
Z = allen wrench 4 - 9.8 Nm *(7.2 lbft)*
W = allen wrench 8 - 24 Nm *(17.7 lbft)*
NOTE: for valves wrench and torque see related pages

Type PFS4

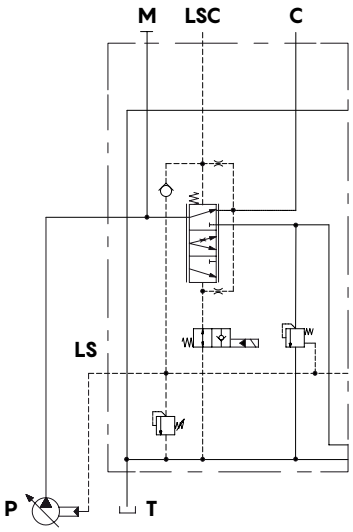

Type PS4

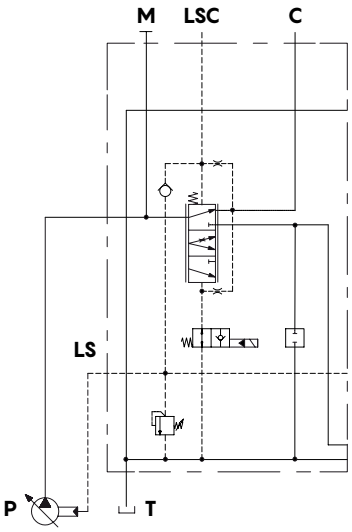

Inlet section

Main pressure relief valve

Setting types

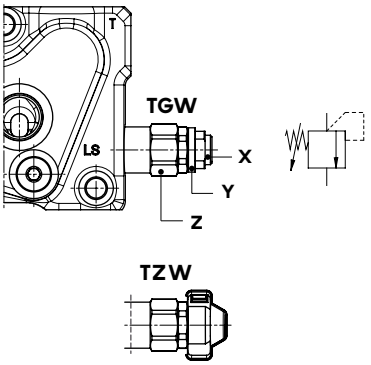

Setting range: type TGW2

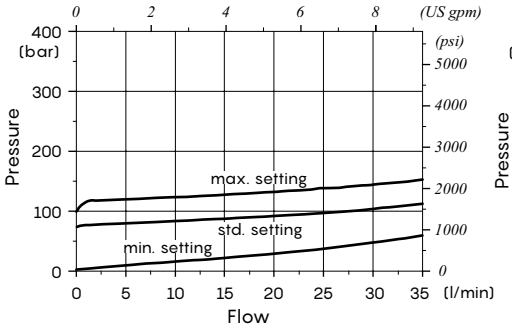

Setting range: type TGW3

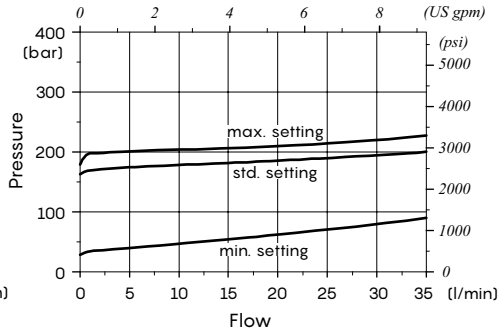

Setting range: type TGW4

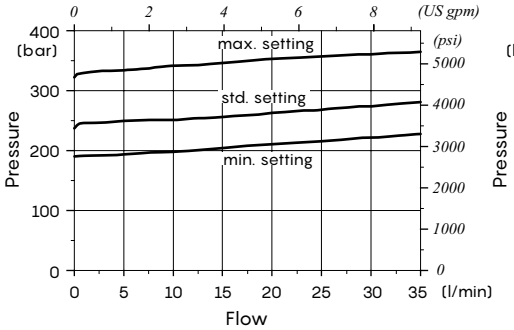

Setting range: type TGW5

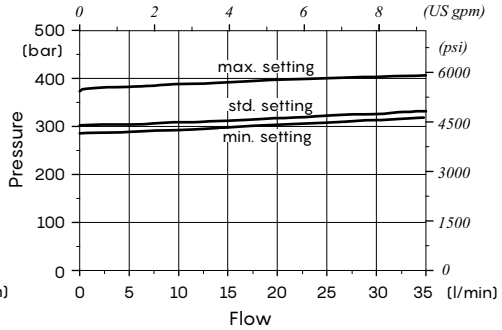

Legenda
TGW: free setting
TZW: valve set and locked
(cap code 4COP126301, n.2 pcs)
RAL3003 pigmented

Wrenches and tightening torques
X = allen wrench 5
Y = wrench 19 - 20 Nm *(14.7 lbft)*
Z = wrench 24 - 42 Nm *(31 lbft)*

Solenoid operated unloading valve

Manual emergency types

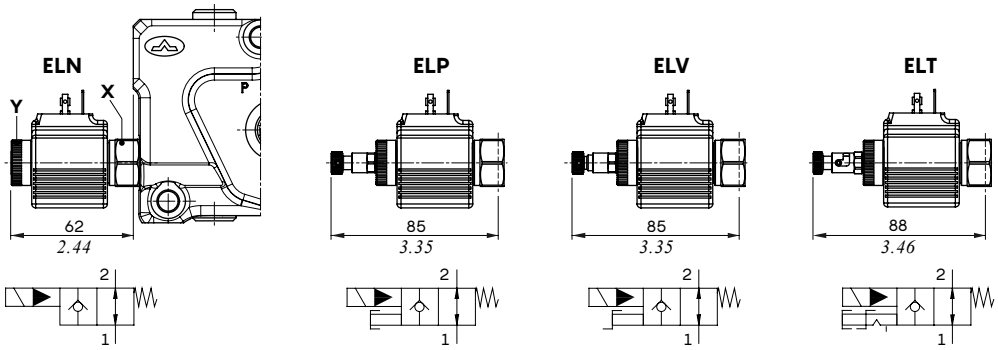

Legenda
ELN: without emergency
ELP: push button emergency override
ELV: screw emergency override
ELT: "push&twist" emergency override

Wrenches and tightening torques
X = wrench 24 - 30 Nm *(22 lbft)*
Y = manual tightening

Features
Max. flow. . . . . : 40 l/min *(10.6 US gpm)*
Max. pressure . . . . . : 380 bar *(5500 psi)*
Internal leakage . . . . . : 0.25 cm³/min @ 210 bar
(0.015 in³/min @ 3050 psi)

For coil features and options see **BER** type coil at page 160.

Priority valve kit

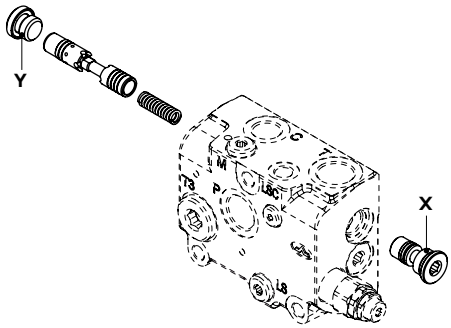

Stand-by (margin pressure) vs. regulated flow
Regulated flow = 40 l/min *(10.6 US gpm)*

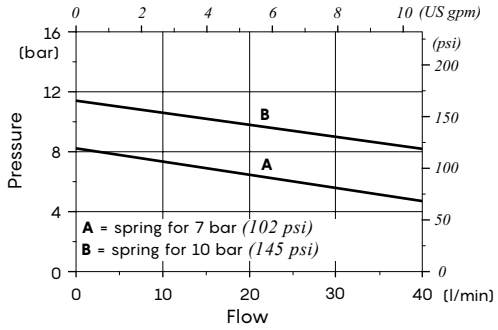

Wrenches and tightening torques
X = allen wrench 8 - 24 Nm *(17.7 lbft)*
Y = allen wrench 6 - 24 Nm *(17.7 lbft)*

Shut-off valve

Manual emergency types

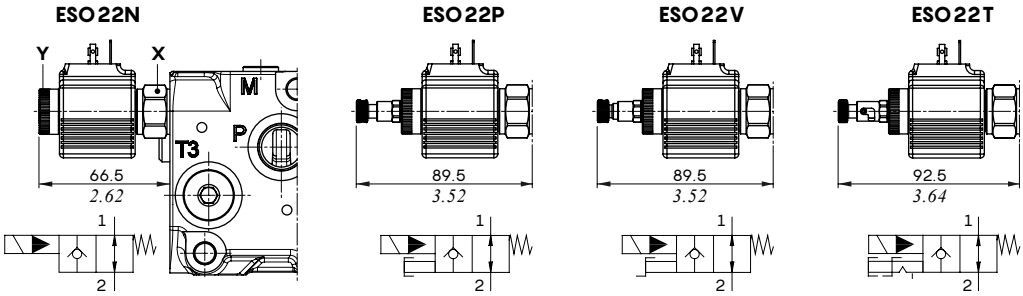

Legenda
ESO22N: without emergency
ESO22P: push button emergency override
ESO22V: screw emergency override
ESO22T: "push&twist" emergency override

Wrenches and tightening torques
X = wrench 24 - 30 Nm *(22 lbft)*
Y = manual tightening

Features
Max. flow. . . . . : 40 l/min *(10.6 US gpm)*
Max. pressure . . . . . : 380 bar *(5500 psi)*
Internal leakage . . . . . : 0.25 cm³/min @ 210 bar
(0.015 in³/min @ 3050 psi)

For coil features and options see **BER** type coil at page 160.

Working section part ordering codes (mechanical, hydraulic, solenoid)

A Mechanical control configuration:

flow on A/B ports (l/min)

Valve setting (bar) A port B port

DPX100 / P - 101(80/80) - 8 L . U1(100)U2(120) - SAE

1A 1B 2A 3 4 8 9

DPX100: Pressure Standard section
DPX100HP: High Pressure section

B Prop. hydraulic control configuration:

DPX100 / Q - E101(80/80) - 8IMN - SAE

1A 1B 2C 5 9

B Solenoid control configuration:

DPX100 / Q - S102(60/60) - 8ES3 - SAE - 12VDC

1A 1B 2B 6 9 7

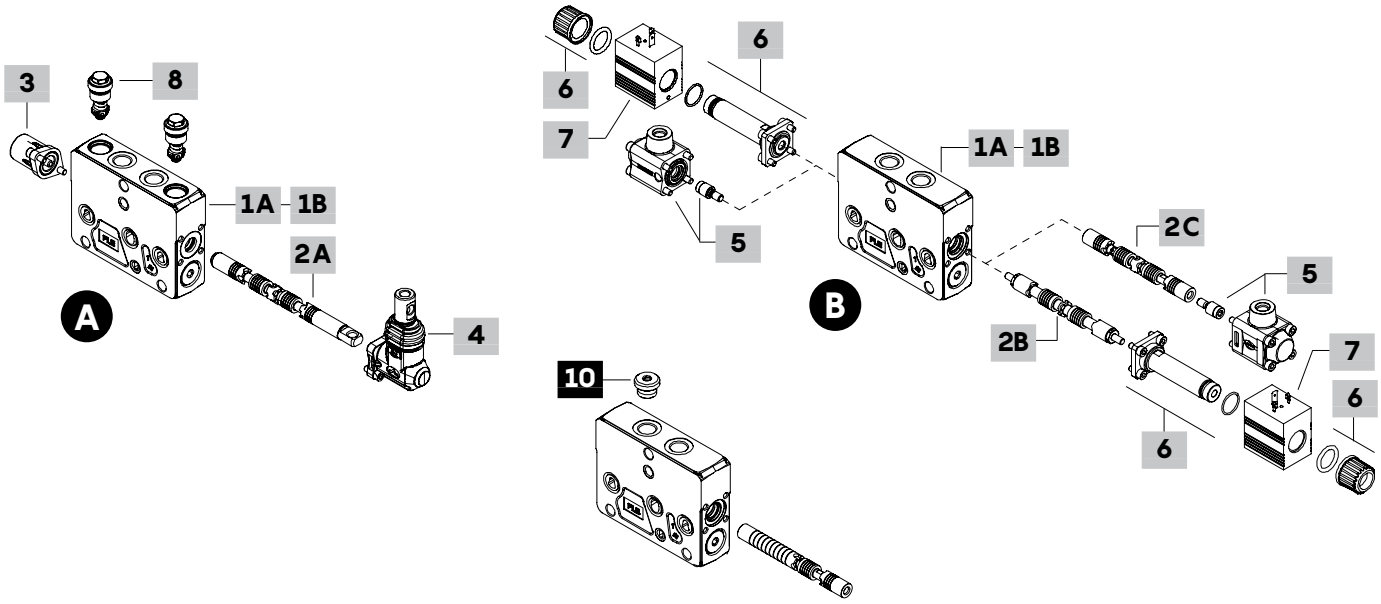

1A Std Pressure working section kit * page 72

For mechanical control

TYPE: **DPX100/Q-SAE-FPM** CODE: 5EL1045010V
DESCRIPTION: Without port valve arrangement
TYPE: **DPX100/P-SAE-FPM** CODE: 5EL1045000V
DESCRIPTION: With port valve arrangement

For proportional hydraulic and solenoid control

TYPE: **DPX100/Q-IM-SAE-FPM** CODE: 5EL1045010AV
DESCRIPTION: Without port valve arrangement
TYPE: **DPX100/P-IM-SAE-FPM** CODE: 5EL1045000AV
DESCRIPTION: With port valve arrangement

1B High Pressure working section kit * page 72

For mechanical control

TYPE: **DPX100HP/Q-SAE-FPM** CODE: 5EL1045011V
DESCRIPTION: Without port valve arrangement
TYPE: **DPX100HP/P-SAE-FPM** CODE: 5EL1045001V
DESCRIPTION: With port valve arrangement

For proportional hydraulic and solenoid control

TYPE: **DPX100HP/Q-IM-SAE-FPM** CODE: 5EL1045010BV
DESCRIPTION: Without port valve arrangement
TYPE: **DPX100HP/P-IM-SAE-FPM** CODE: 5EL1045000BV
DESCRIPTION: With port valve arrangement

NOTE (*): Codes are referred to **UN-UNF** thread.

Working section part ordering codes (mechanical, hydraulic, solenoid)

2A Spool for mechanical control page 73

Flow is referred to 14 bar *(200 psi)* stand-by (margin pressure)

TYPE	CODE	DESCRIPTION
Double acting with A and B closed in neutral position		
101(80)	3CU7110101	80 l/min *(21 US gpm)* flow
109(70)	3CU7110109	70 l/min *(18.5 US gpm)* flow
102(60)	3CU7110102	60 l/min *(16 US gpm)* flow
112(50)	3CU7110003	50 l/min *(13.2 US gpm)* flow
103(40)	3CU7110103	40 l/min *(10.5 US gpm)* flow
111(30)	3CU7110002	30 l/min *(7.9 US gpm)* flow
104(20)	3CU7110104	20 l/min *(5.3 US gpm)* flow
113(10)	3CU7110113	10 l/min *(2.6 US gpm)* flow
Double acting with A and B to tank in neutral position		
201(80)	3CU7110201	80 l/min *(21 US gpm)* flow
211(70)	3CU7125211	70 l/min *(18.5 US gpm)* flow
206(60)	3CU7110204	60 l/min *(16 US gpm)* flow
209(50)	3CU7125209	50 l/min *(13.2 US gpm)* flow
208(40)	3CU7125208	40 l/min *(10.5 US gpm)* flow
212(30)	3CU7125212	30 l/min *(7.9 US gpm)* flow
205(20)	3CU7110205	20 l/min *(5.3 US gpm)* flow
214(5)	3CU7125214	5 l/min *(1.3 US gpm)* flow
Double acting with A and B partially to tank in neutral position		
2H01(80)	3CU7110202	80 l/min *(21 US gpm)* flow
2H12(70)	3CU7124220	70 l/min *(18.5 US gpm)* flow
2H06(60)	3CU7124213	60 l/min *(16 US gpm)* flow
2H05(40)	3CU7124212	40 l/min *(10.5 US gpm)* flow
2H03(30)	3CU7110206	30 l/min *(7.9 US gpm)* flow
2H04(20)	3CU7124211	20 l/min *(5.3 US gpm)* flow
2H07(10)	3CU7124214	10 l/min *(2.6 US gpm)* flow
Single acting on A, B plugged: SAE8 plug is required		
301(80)	3CU7110301	80 l/min *(21 US gpm)* flow
304(60)	3CU7131304	60 l/min *(16 US gpm)* flow
303(40)	3CU7131303	40 l/min *(10.5 US gpm)* flow
302(20)	3CU7131302	20 l/min *(5.3 US gpm)* flow
Single acting on B, A plugged: SAE8 plug is required		
401(80)	3CU7110401	80 l/min *(21 US gpm)* flow
404(60)	3CU7135404	60 l/min *(16 US gpm)* flow
403(40)	3CU7135403	40 l/min *(10.5 US gpm)* flow
402(20)	3CU7135402	20 l/min *(5.3 US gpm)* flow
Double acting with A and B closed in neutral pos., 4 positions, floating in 4th pos. with spool in: type 13 or 13F positioner is required		
508(70)	3CU7142508	70 l/min *(18.5 US gpm)* flow
507(60)	3CU7142507	60 l/min *(16 US gpm)* flow
505(40)	3CU7142505	40 l/min *(10.5 US gpm)* flow
506(20)	3CU7142506	20 l/min *(5.3 US gpm)* flow

2B Spool for solenoid control page 73

Flow is referred to 14 bar *(200 psi)* stand-by (margin pressure)

TYPE	CODE	DESCRIPTION
Double acting with A and B closed in neutral position		
S102(60)	3CU7410102	60 l/min *(16 US gpm)* flow
S108(40)	3CU7410108	40 l/min *(10.5 US gpm)* flow
S107(30)	3CU7410107	30 l/min *(7.9 US gpm)* flow
S105(20)	3CU7410105	20 l/min *(5.3 US gpm)* flow
S106(10)	3CU7410106	10 l/min *(2.6 US gpm)* flow
S109(5)	3CU7410109	5 l/min *(1.3 US gpm)* flow
Double acting with A and B to tank in neutral position		
S208(40)	3CU7410208	40 l/min *(10.5 US gpm)* flow
S205(20)	3CU7410205	20 l/min *(5.3 US gpm)* flow
S206(10)	3CU7410206	10 l/min *(2.6 US gpm)* flow
Double acting with A and B partially to tank in neutral position		
S2H02(60)	3CU7410203	60 l/min *(16 US gpm)* flow
S2H06(10)	3CU7410206H	10 l/min *(2.6 US gpm)* flow
Single acting on A or B, other port plugged: SAE8 plug is required		
S308-S408(40)	3CU7410308	40 l/min *(10.5 US gpm)* flow
S305-S405(20)	3CU7410305	20 l/min *(5.3 US gpm)* flow

2C Spool for prop. hydraulic control page 73

Flow is referred to 14 bar *(200 psi)* stand-by (margin pressure)

TYPE	CODE	DESCRIPTION
Double acting with A and B closed in neutral position		
E101(80)	3CU7710101	80 l/min *(21 US gpm)* flow
E108(60)	3CU7710108	60 l/min *(16 US gpm)* flow
E123(50)	3CU7710123	50 l/min *(13.2 US gpm)* flow
E105(40)	3CU7710105	40 l/min *(10.5 US gpm)* flow
E113(30)	3CU7710113	30 l/min *(7.9 US gpm)* flow
E106(20)	3CU7710106	20 l/min *(5.3 US gpm)* flow
E110(10)	3CU7710110	10 l/min *(2.6 US gpm)* flow
E159(5)	3CU7710159	5 l/min *(1.3 US gpm)* flow
Double acting with A and B to tank in neutral position		
E210(70)	3CU7725006	70 l/min *(18.5 US gpm)* flow
E209(60)	3CU7725005	60 l/min *(16 US gpm)* flow
E214(50)	3CU7725010	50 l/min *(13.2 US gpm)* flow
E206(40)	3CU7725003	40 l/min *(10.5 US gpm)* flow
E202(30)	3CU7725002	30 l/min *(7.9 US gpm)* flow
E205(20)	3CU7725001	20 l/min *(2.6 US gpm)* flow
E211(10)	3CU7725007	10 l/min *(2.6 US gpm)* flow
Double acting with A and B partially to tank in neutral position		
E2H01(80)	3CU7710202	80 l/min *(21 US gpm)* flow
E2H05(60)	3CU7724004	60 l/min *(16 US gpm)* flow
E2H04(40)	3CU7724003	40 l/min *(10.5 US gpm)* flow
E2H06(20)	3CU7724005	20 l/min *(5.3 US gpm)* flow
E2H03(10)	3CU7724002	10 l/min *(2.6 US gpm)* flow
E2H25(5)	3CU7724159	5 l/min *(1.3 US gpm)* flow
Single acting on A or B, other port plugged: SAE8 plug is required		
E301-E401(80)	3CU7710301	80 l/min *(21 US gpm)* flow
E305-E405(60)	3CU7731305	60 l/min *(16 US gpm)* flow
E304-E404(40)	3CU7731304	40 l/min *(10.5 US gpm)* flow
E303-E403(20)	3CU7731303	20 l/min *(5.3 US gpm)* flow
Double acting with A and B closed in neutral pos., 4 positions, floating in 4th pos. with spool in: type 13IMS control is required		
I504(60)	YCU7742504	60 l/min *(16 US gpm)* flow
I503(20)	YCU7742503	20 l/min *(5.3 US gpm)* flow

NOTE: to order these spools as spare parts
it's necessary to order nr. 2 pins code 3VIT110241.
This rule is not required for floating spools

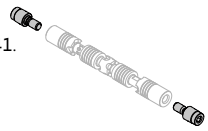

Working section part ordering codes (mechanical, hydraulic, solenoid)

3 "A" side spool positioners page 75

TYPE	CODE	DESCRIPTION
7FT	5V07407000	With friction and neutral pos. notch
7FTN	5V07407010	As 7FT, friction regulation with spring
8	5V08107000	3 pos., spring return to neutral pos.
8F2	5V08107100	Spool stroke limiter on B port
8D	5V08107200	External pin with M6 female thread
8TL	5V08107310	Arrangement for double control
8RM2-12VDC	5V08107590	Electromagnetic detent in pos.2
8MG3(NO)	5V08107660	With micro in postions 1 and 2
8PP	5V08107700	Proportional pneumatic control
8PNB	5V08107718	On/off waterproof pneumatic control
8EPNB3-12VDC	5V08107742	On/off electropneumatic control
8EPNB3-24VDC	5V08107743	As previous one
8K-12DC	5V08707212	Solenoid detent in neutral position
8K-24DC	5V08707224	As previous one
9B	5V09207000	Detent in position 1
10B	5V10207000	Detent in position 2
11B	5V11207000	Detent in positions 1 and 2
For floating circuit (spool 5)		
13N	5V13307005	4 positions, detent in 4th position with spring return to neutral position
13F	5V13507000	4 positions, spring return to neutral position

4 "B" side spool control kit page 80

TYPE	CODE	DESCRIPTION
L	5LEV107000	Standard lever box
LSG	5LEV107000S	As previous one, water-proof type
LF1	5LEV107100	As type L, spool stroke limiter on A port
LSGF1	5LEV107100S	As previous one, water-proof type
SLC	5COP207000	Without lever with endcap
SLP	5COP107010	Without lever with dust-proof plate
TQ	5TEL102100	Flexible cable connection
LCA1-4	5CLO207010	Joystick for 2 section operation: type 1 and 4 configurations.
LCA2-3	5CLO207011	As previous one: type 2-3 configurations

5 Proportional hydraulic control * page 82

TYPE	CODE	DESCRIPTION
8IMN-SAE	5IDR204702V	Range 8-27 bar *(116-392 psi)*
8IMF3N-SAE	5IDR204710V	As previous one, with spool stroke limiter
8IMXN-SAE	5IDR204701V	Range 7.5-24 bar *(109-348 psi)*
8IMXF3N-SAE	5IDR204713V	As previous one, with spool stroke limiter
For floating circuit (spool I5)		
13IMS-SAE	5IDR207750V	Range 6.5-15.5 / 8-22.5 bar *(94-225 / 116-326 psi)*

6 On/off solenoid control page 84

TYPE	CODE	DESCRIPTION
8ES1-8ES2	5CAN08061V	Single acting on A or B port
8ES3	5CAN08062V	Double acting
8ES3F3	5CAN08040V	Double acting with spool stroke limiter

7 Coil

TYPE	CODE	DESCRIPTION
12VDC	4SOL412012	12VDC, **D12** type, SO4400 connector

For complete available coils list see page 160.

8 Port valves page 94

TYPE	CODE	DESCRIPTION
UT	XTAP522441V	Valve blanking plug
	XTAP522442V	As previous, for HP valve
C	5KIT410000	Anticavitation valve

Fixed setting antishock and anticavitation valves:

setting is referred to 10 l/min *(2.6 US gpm)*

TYPE: **U 100** (100 = setting (bar)) CODE: 5KIT330 100 (100 = setting (bar))

SETTING:

25 bar *(363 psi)*	30 bar *(435 psi)*	40 bar *(580 psi)*	50 bar *(725 psi)*
63 bar *(914 psi)*	80 bar *(1150 psi)*	100 bar *(1450 psi)*	110 bar *(1590 psi)*
125 bar *(1800 psi)*	140 bar *(2050 psi)*	150 bar *(2150 psi)*	160 bar *(2300 psi)*
175 bar *(2550 psi)*	190 bar *(2750 psi)*	200 bar *(2900 psi)*	210 bar *(3050 psi)*
220 bar *(3190 psi)*	230 bar *(3350 psi)*	240 bar *(3500 psi)*	250 bar *(3600 psi)*
260 bar *(3750 psi)*	270 bar *(3900 psi)*	280 bar *(4050 psi)*	290 bar *(4200 psi)*
300 bar *(4350 psi)*	310 bar *(4500 psi)*	320 bar *(4650 psi)*	340 bar *(4950 psi)*
360 bar *(5200 psi)*	400 bar *(5800 psi)*	420 bar *(6100 psi)*	

9 Section threading

Only specify if it is different from **BSP** standard (see page 7).

10 Plug for single acting spool *

CODE	DESCRIPTION
3XTAP822150	SAE8 plug

NOTE (*): Codes are referred to **UN-UNF** thread.

Working section part ordering codes (electrohydraulic)

A One-side electrohydraulic control configuration:

flow on A/B ports (l/min)

Valve setting (bar) A port B port

DPX100 / PZ - E101(80\80) - 8EZ3 LQF3 . U1(100)U2(120) - SAE - 12VDC

1A 1B 2 3 4 7 8 3

DPX100: Standard Pressure section
DPX100HP: High Pressure section

B One-side complete electrohydraulic control configuration:

DPX100 / QZ - E101(80\80) - 8EZ3SLCQ - SAE -12VDC

1A 1B 2 5 8 5

C Two-side electrohydraulic control configuration:

DPX100 / QE - E101(80\80) - 8EB3TF3 - SAE -12VDC

1A 1B 2 6 8 6

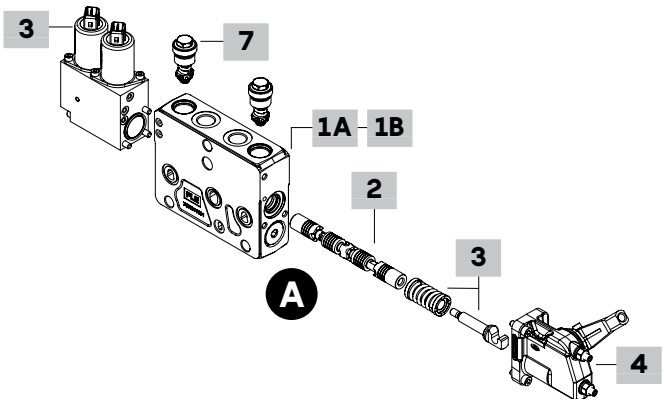

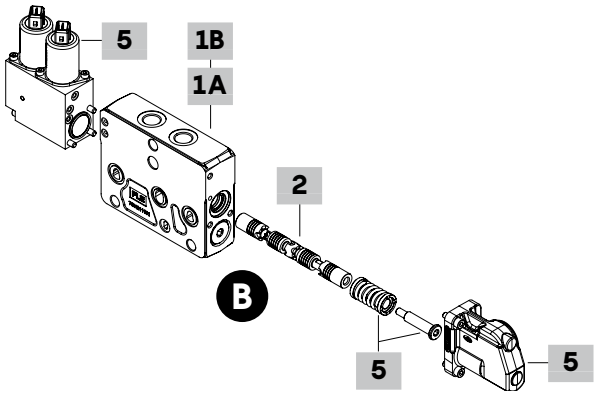

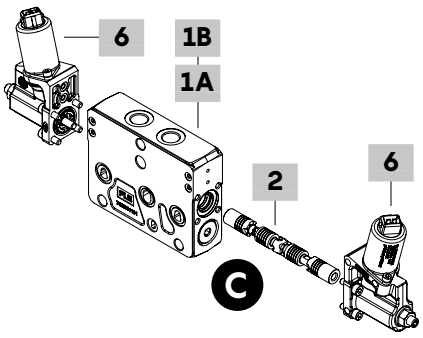

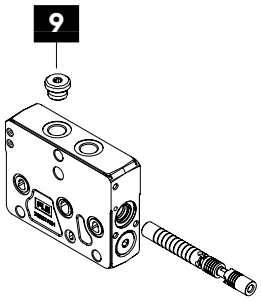

Working section part ordering codes (electrohydraulic)

1A Std press. working section kit * page 72

For two-side electrohydraulic control

TYPE: **DPX100/QE-SAE-FPM** CODE: 5EL1045012V
DESCRIPTION: Without port valve arrangement
TYPE: **DPX100/PE-SAE-FPM** CODE: 5EL1045002V
DESCRIPTION: With port valve arrangement

For one-side electrohydraulic control

TYPE: **DPX100/QZ-SAE-FPM** CODE: 5EL1047021AV
DESCRIPTION: Without port valves arrangement
TYPE: **DPX100/PZ-SAE-FPM** CODE: 5EL1047006V
DESCRIPTION: With port valve arrangement

1B High press. working section kit* page 72

For two-side electrohydraulic control

TYPE: **DPX100HP/QE-SAE-FPM** CODE: 5EL1045015V
DESCRIPTION: Without port valve arrangement
TYPE: **DPX100HP/PE-SAE-FPM** CODE: 5EL1045005V
DESCRIPTION: With port valve arrangement

For one-side electrohydraulic control

TYPE: **DPX100HP/QZ-SAE-FPM** CODE: 5EL1047021BV
DESCRIPTION: Without port valves arrangement
TYPE: **DPX100HP/PZ-SAE-FPM** CODE: 5EL1045006V
DESCRIPTION: With port valves arrangement

2 Spool page 73

Flow is referred to 14 bar *(200 psi)* stand-by (margin pressure)

TYPE	CODE	DESCRIPTION
Double acting with A and B closed in neutral position		
E101(80)	3CU7710101	80 l/min *(21 US gpm)* flow
E108(60)	3CU7710108	60 l/min *(16 US gpm)* flow
E123(50)	3CU7710123	50 l/min *(13.2 US gpm)* flow
E105(40)	3CU7710105	40 l/min *(10.5 US gpm)* flow
E113(30)	3CU7710113	30 l/min *(7.9 US gpm)* flow
E106(20)	3CU7710106	20 l/min *(5.3 US gpm)* flow
E110(10)	3CU7710110	10 l/min *(2.6 US gpm)* flow
E159(5)	3CU7710159	5 l/min *(1.3 US gpm)* flow
Double acting with A and B to tank in neutral position		
E210(70)	3CU7725006	70 l/min *(18.5 US gpm)* flow
E209(60)	3CU7725005	60 l/min *(16 US gpm)* flow
E214(50)	3CU7725010	50 l/min *(13.2 US gpm)* flow
E206(40)	3CU7725003	40 l/min *(10.5 US gpm)* flow
E202(30)	3CU7725002	30 l/min *(7.9 US gpm)* flow
E205(20)	3CU7725001	20 l/min *(2.6 US gpm)* flow
E211(10)	3CU7725007	10 l/min *(2.6 US gpm)* flow
Double acting with A and B partially to tank in neutral position		
E2H01(80)	3CU7710202	80 l/min *(21 US gpm)* flow
E2H05(60)	3CU7724004	60 l/min *(16 US gpm)* flow
E2H04(40)	3CU7724003	40 l/min *(10.5 US gpm)* flow
E2H06(20)	3CU7724005	20 l/min *(5.3 US gpm)* flow
E2H03(10)	3CU7724002	10 l/min *(2.6 US gpm)* flow
E2H25(5)	3CU7724159	5 l/min *(1.3 US gpm)* flow
Single acting on A or B, other port plugged: SAE8 plug is required		
E301-E401(80)	3CU7710301	80 l/min *(21 US gpm)* flow
E305-E405(60)	3CU7731305	60 l/min *(16 US gpm)* flow
E304-E404(40)	3CU7731304	40 l/min *(10.5 US gpm)* flow
E303-E403(20)	3CU7731303	20 l/min *(5.3 US gpm)* flow
Double acting with A and B closed in neutral pos., 4 positions, floating in 4th pos. with spool in: type 13IMS control is required		
I504(60)	YCU7742504	60 l/min *(16 US gpm)* flow
I503(20)	YCU7742503	20 l/min *(5.3 US gpm)* flow

3 One-side electrohydr.control; "A" side page 90

These controls must be coupled with "B" side options

TYPE	CODE	DESCRIPTION
8EZ3-12VDC	5IDR604300V	With AMP connector
8EZ3-24VDC	5IDR604301V	As previous one
8EZH3-12VDC	5IDR604329V	With horizontal pressure reducing valves and AMP conn.
8EZH3-24VDC	5IDR604331V	As previous one
8EZ34-12VDC	5IDR604302V	With Deutsch connector
8EZ34-24VDC	5IDR604303V	As previous one
8EZH34-12VDC	5IDR604310V	With horizontal pressure reducing valves and Deutsch connector
8EZH34-24VDC	5IDR604324V	As previous one
With spool position sensor		
8EZ3SPSD-12VDC	5IDR604304V	AMP conn. and digital sensor
8EZ3SPSD-24VDC	5IDR604305V	As previous one
8EZ34SPSD-12VDC	5IDR604306V	Deutsch conn. and digital sensor
8EZ34SPSD-24VDC	5IDR604307V	As previous one
8EZ34SPSL-0.5(A)-4.5(B)-12VDC	5IDR604311V	AMP conn. and analog sensor
For floating circuit (spool E5)		
13EZ3-12VDC	5IDR614300V	With AMP connector
13EZ3-24VDC	5IDR614301V	As previous one
13EZ34-12VDC	5IDR614302V	With Deutsch connector
13EZ34-24VDC	5IDR614303V	As previous one

4 One-side electrohydr.option; "B" side page 91

These options must be coupled with "A" side controls

TYPE	CODE	DESCRIPTION
LQ	5LEV100707V	Lever box
LQF3	5LEV100708V	Lever box with spool stroke limiter
LQSL	5COP204100AV	Lever box without lever

NOTE (*): Codes are referred to **UN-UNF** thread.

Working section part ordering codes (electrohydraulic)

5 One-side complete electrohydr.control page 92

Controls already comprehensive of endcap on B side

TYPE	CODE	DESCRIPTION
8EZ3SLCQ-12VDC	5IDR604300SV	With AMP connector
8EZ3SLCQ-24VDC	5IDR604301SV	As previous one
8EZ34SLCQ-12VDC	5IDR604302SV	With Deutsch connector
8EZ34SLCQ-24VDC	5IDR604303SV	As previous one
8EZH34SLCQ-12VDC	5IDR604310SV	With horizontal pressure reducing valves and Deutsch connector
8EZH34SLCQ-24VDC	5IDR604325SV	As previous one
With spool position sensor		
8EZ3SPSDSLCQ-12VDC	5IDR604304SV	With AMP connector and digital sensor
8EZ3SPSDSLCQ-24VDC	5IDR604305SV	As previous one
8EZ34SPSDSLCQ-12VDC	5IDR604306SV	With Deutsch connector and digital sensor
8EZ34SPSDSLCQ-24VDC	5IDR604307SV	As previous one
8EZ34SPSL-0.5(A)-4.5(B)SLCQ-12VDC	5IDR604311SV	With AMP connector and analog sensor

6 Two-side electrohydr. control page 88

TYPE	CODE	DESCRIPTION
Without lever control		
8EB3T-12VDC	5IDR904214V	With AMP connector
8EB3T-24VDC	5IDR904222V	As previous one
8EB34T-12VDC	5IDR904236V	With Deutsch connector
8EB34T-24VDC	5IDR904237V	As previous one
8EB3TF3-12VDC	5IDR904217V	With AMP, spool stroke limiter
8EB3TF3-24VDC	5IDR904224V	As previous one
8EB34TF3-12VDC	5IDR904235V	Deutsch conn.and stroke limiter
8EB34TF3-24VDC	5IDR904238V	As previous one
Without lever control, with spool position sensor		
8EB34TSPSL-0.5(A)-4.5(B)-12VDC	5IDR904268V	Deutsch conn. and analog sensor
8EB3TSPSD-12VDC	5IDR904233V	AMP conn. and digital sensor
8EB3TSPSD-24VDC	5IDR904226V	As previous one
Without lever control: for floating circuit (E5 spool)		
13EB3T-12VDC	5IDR914201V	With AMP connector
13EB3T-24VDC	5IDR914202V	As previous one
13EB34T-12VDC	5IDR914214V	With Deutsch connector
13EB34T-24VDC	5IDR914215V	As previous one
With lever control		
8EB3TLH-12VDC	5IDR904215AV	With AMP connector
8EB3TLH-24VDC	5IDR904228AV	As previous one
8EB34TLH-12VDC	5IDR904219AV	With Deutsch connector
8EB34TLH-24VDC	5IDR904239AV	As previous one
8EB3TLHF3-12VDC	5IDR904311V	With AMP, spool stroke limiter
8EB3TLHF3-24VDC	5IDR904308V	As previous one
8EB34TLHF3-12VDC	5IDR904240AV	With Deutsch connector with spool stroke limiter
8EB34TLHF3-24VDC	5IDR904241AV	As previous one
With lever control and spool position sensor		
8EB3TLHSPSD-12VDC	5IDR904234AV	AMP connector and digital sensor
8EB3TLHSPSD-24VDC	5IDR904232AV	As previous one
8EB3TLHF3SPSL-0.5(A)-4.5(B)-12VDC	5IDR904259AV	With spool limiter, AMP connector and analog sensor
8EB3TLHF3SPSL-0.5(A)-4.5(B)-24VDC	5IDR904247AV	As previous one
With lever control: for floating circuit (E5 spool)		
13EB3TLH-12VDC	5IDR914220AV	With AMP connector
13EB3TLH-24VDC	5IDR914211AV	As previous one
13EB34TLH-12VDC	5IDR914216V	With Deutsch connector
13EB34TLH-24VDC	5IDR914217AV	As previous one
13EB3TLHF3-12VDC	5IDR914213AV	With AMP and spool stroke limiter
13EB3TLHF3-24VDC	5IDR914210AV	As previous one
13EB34TLHF3-12VDC	5IDR914218AV	With Deutsch, spool stroke limiter
13EB34TLHF3-24VDC	5IDR914219V	As previous one

7 Port valves page 94

TYPE	CODE	DESCRIPTION
U025	5KIT330025	Setting: 25 bar *(360 psi)*

For complete valves list see previous pages.

8 Section threading

Only specify if it is different from **BSP** standard (see page 7).

9 Plug for single acting spool *

CODE	DESCRIPTION
3XTAP822150	SAE8 plug

NOTE (*): Codes are referred to **UN-UNF** thread.

Working section

Dimensions and hydraulic circuit

Section for mechanical, hydraulic and solenoid controls

Type Q for Std or HP

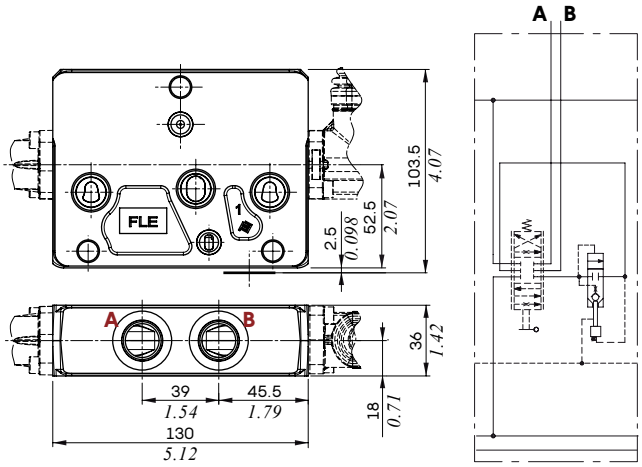

Type P for Std or HP

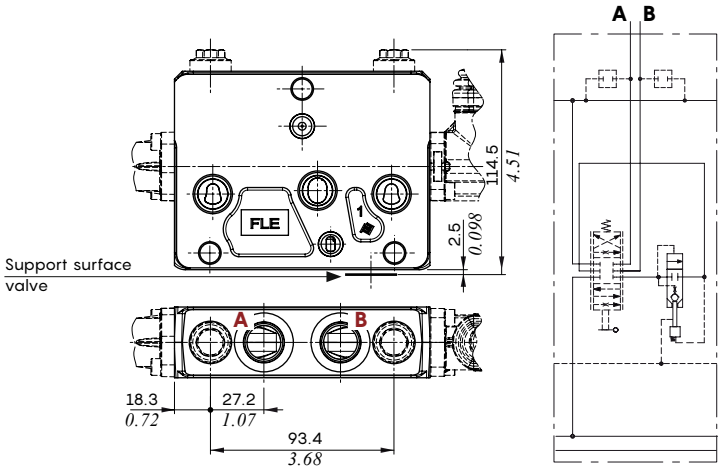

Section for electrohydraulic control

Type QE or PE

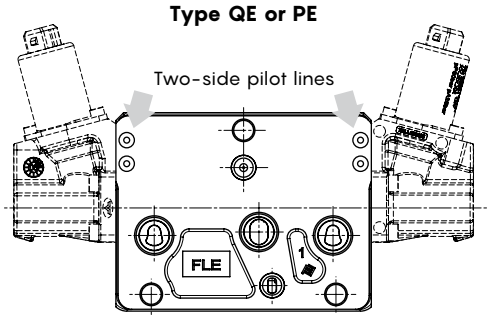

Type QZ or PZ

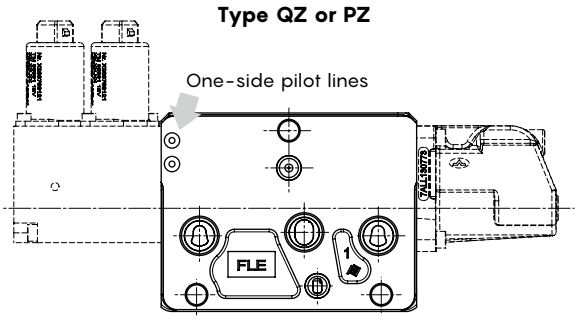

Type QE **Type PE** **Type QZ** **Type PZ**

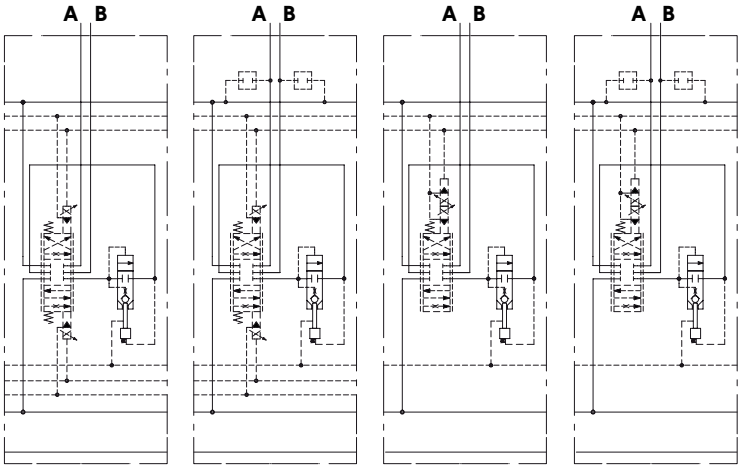

Working section

Spool

Type 1 (1../E1../S1..)
A, B closed in neutral position

1 **0** 2

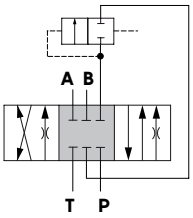

Stroke (1../E1..)
position 1: + 6.5 mm *(+ 0.26 in)*
position 2: - 6.5 mm *(- 0.26 in)*
Stroke (S1..)
position 1: + 3.5 mm *(+ 0.14 in)*
position 2: - 3.5 mm *(- 0.14 in)*

Type 2(E2..)
A, B to tank in neutral position

1 **0** 2

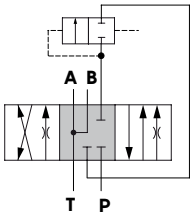

Stroke
position 1: + 6.5 mm *(+ 0.26 in)*
position 2: - 6.5 mm *(- 0.26 in)*

Type 2H(2H../E2H../S2H..)
A, B partially to tank in neutral position

1 **0** 2

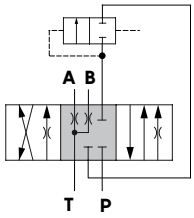

Stroke (2H../E2H..)
position 1: + 6.5 mm *(+ 0.26 in)*
position 2: - 6.5 mm *(- 0.26 in)*
Stroke (S2H..)
position 1: + 3.5 mm *(+ 0.14 in)*
position 2: - 3.5 mm *(- 0.14 in)*

Type 3 (3../E3../S3..)
Single acting on A

1 **0** 2

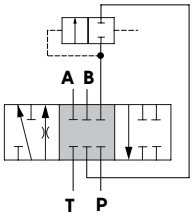

Stroke (3../E3..)
position 1: + 6.5 mm *(+ 0.26 in)*
position 2: - 6.5 mm *(- 0.26 in)*
Stroke (S3..)
position 1: + 3.5 mm *(+ 0.14 in)*
position 2: - 3.5 mm *(- 0.14 in)*

Type 4 (4../E4../S4..)
Single acting on B

1 **0** 2

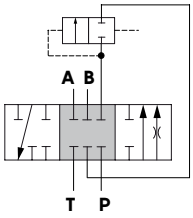

Stroke (4../E4..)
position 1: + 6.5 mm *(+ 0.26 in)*
position 2: - 6.5 mm *(- 0.26 in)*
Stroke (S4..)
position 1: + 3.5 mm *(+ 0.14 in)*
position 2: - 3.5 mm *(- 0.14 in)*

Type 5 (5../E5../I5..)
Floating in 4th position (pos.3)

1 **0** 2 3

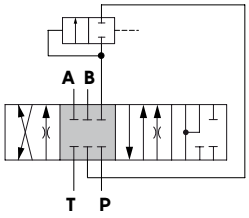

Stroke
position 1: + 6 mm *(+ 0.24 in)*
position 2: - 6 mm *(- 0.24 in)*
position 3: - 10.5 mm *(- 0.41 in)*

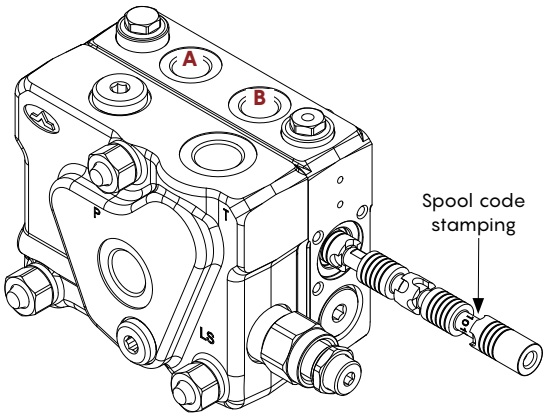

In case of spool replacement the code stamping must be oriented toward B port.

Spool flow vs. Stand-by pressure (margin pressure)

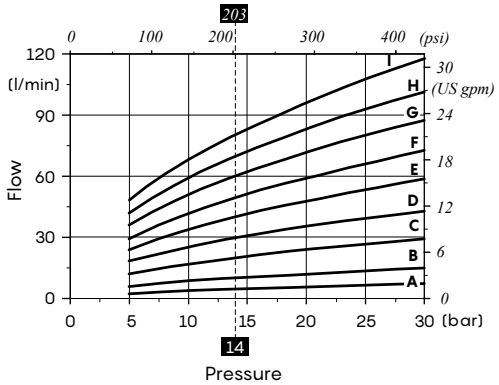

Curves with spool nominal flow @ 14 bar *(200 psi)* **stand-by (margin pressure)**
A = 5 l/min *(1.3 US gpm)* ± 10%
B = 10 l/min *(2.6 US gpm)* ± 10%
C = 20 l/min *(5.3 US gpm)* ± 10%
D = 30 l/min *(7.9 US gpm)* ± 10%
E = 40 l/min *(10.6 US gpm)* ± 10%
F = 50 l/min *(13.2 US gpm)* ± 10%
G = 60 l/min *(16 US gpm)*± 10%
H = 70 l/min *(18.5 US gpm)* ± 10%
I = 80 l/min *(21 US gpm)* ± 10%

Working section

Spool

Following curves are detected with standard spools, connecting P⇒A⇒B⇒T and P⇒B⇒A⇒T ports without flow multiplication. Customized spools with backpressure or flow multiplication may require different force, pressure and pilot current for operation.

3 positions spool metering curve

Qin = 90 l/min *(24 US gpm)* - Open center circuit

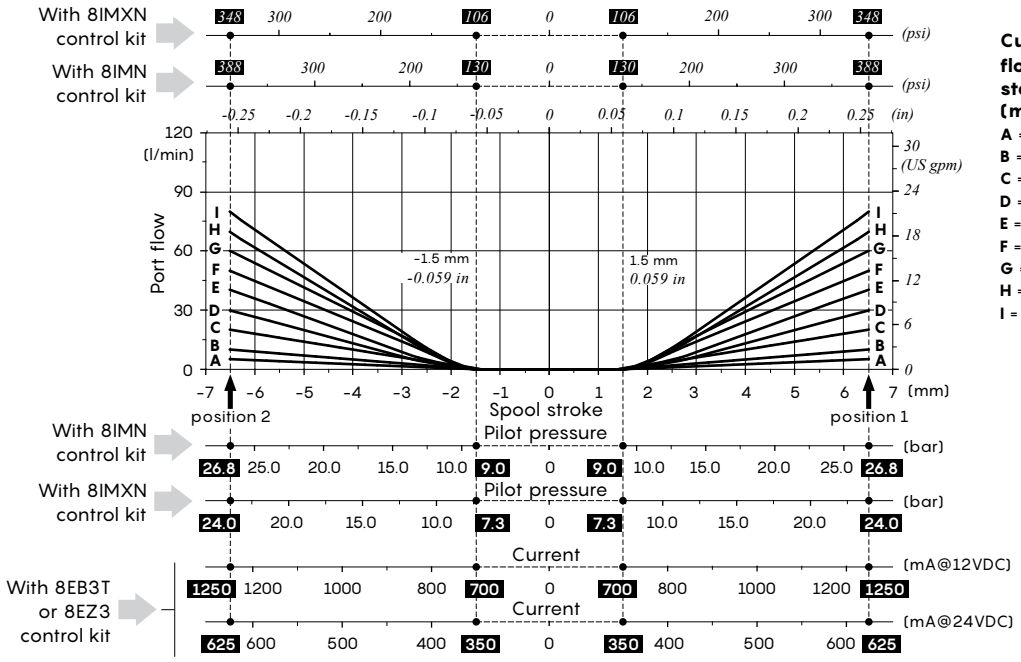

Curves with spool nominal flow @ 14 bar *(200 psi)* **stand-by (margin pressure)**

A = 5 l/min *(1.3 US gpm)*
B = 10 l/min *(2.6 US gpm)*
C = 20 l/min *(5.3 US gpm)*
D = 30 l/min *(7.9 US gpm)*
E = 40 l/min *(10.6 US gpm)*
F = 50 l/min *(13.2 US gpm)*
G = 60 l/min *(16 US gpm)*
H = 70 l/min *(18.5 US gpm)*
I = 80 l/min *(21 US gpm)*

Floating spool metering curve

Qin = 90 l/min *(24 US gpm)* - Open center circuit

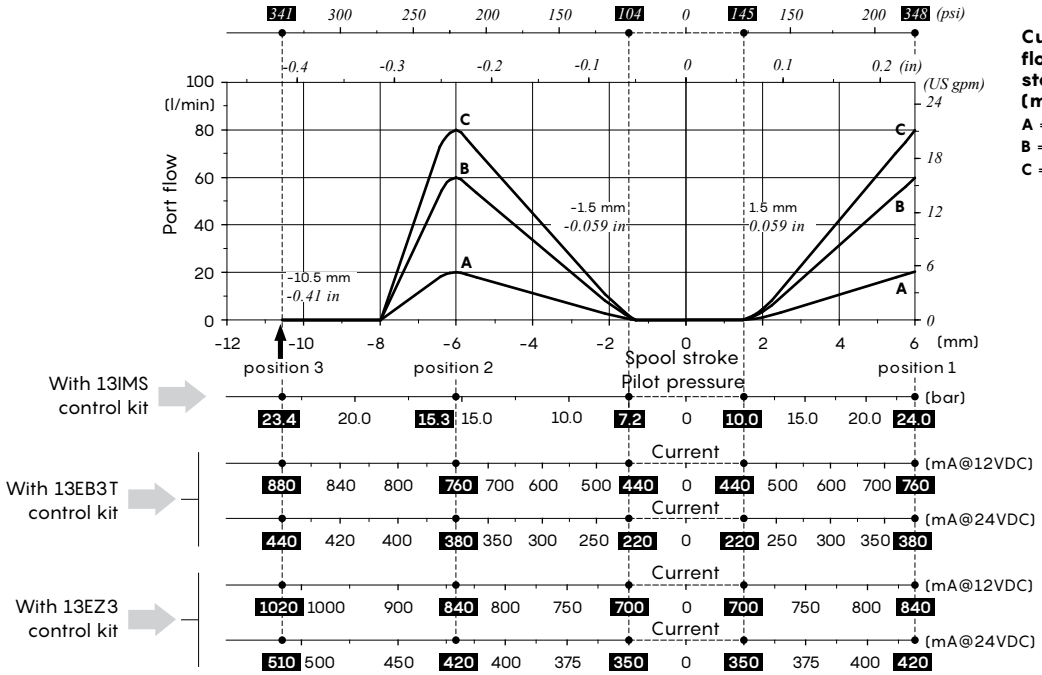

Curves with spool nominal flow @ 14 bar *(200 psi)* **stand-by (margin pressure)**

A = 20 l/min *(5.3 US gpm)*
B = 60 l/min *(16 US gpm)*
C = 80 l/min *(21 US gpm)*

Working section

"A" side spool positioners

With friction and neutral position notch

Type 7FT

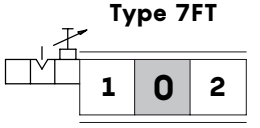

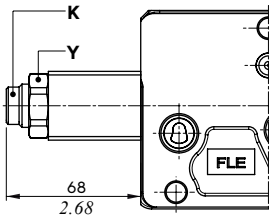

Type 7FTN
With spring regulation

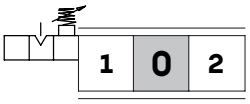

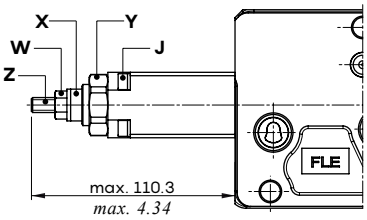

Wrenches and tightening torques
J = allen wrench 4 - 6.6 Nm *(4.9 lbft)*
K = allen wrench 6
X = wrench 17
Y = wrench 30, manual tightening
Z = allen wrench 4
W = wrench 13 - 24 Nm *(17.7 lbft)*

With spring return to neutral position

Type 8

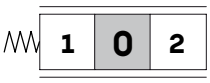

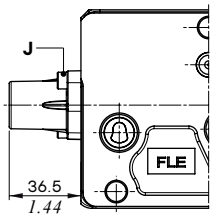

Type 8F2
Spool stroke limiter on B port

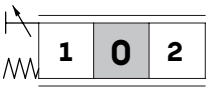

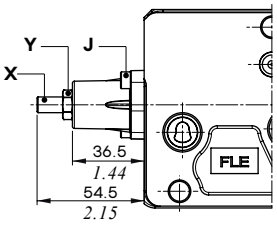

Type 8D
External pin with M6 female thread

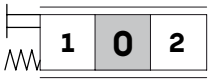

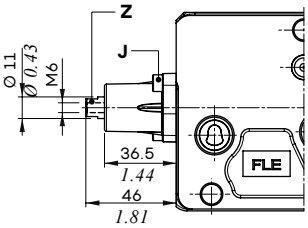

Type 8TL
Arrangement for double mechanical control

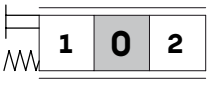

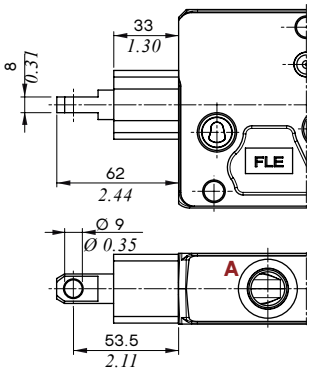

Wrenches and tightening torques
J = allen wrench 4 - 6.6 Nm *(4.9 lbft)*
X = allen wrench 4
Y = wrench 13 - 24 Nm *(17.7 lbft)*
Z = wrench 9

Force vs. Stroke diagram

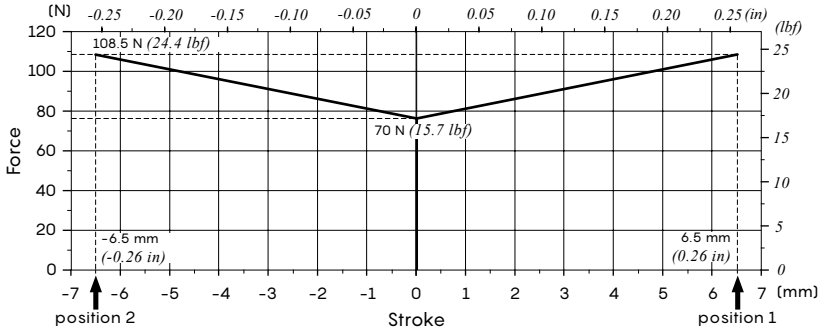

Working section

"A" side spool positioners

With electromagnetic detent in position 2

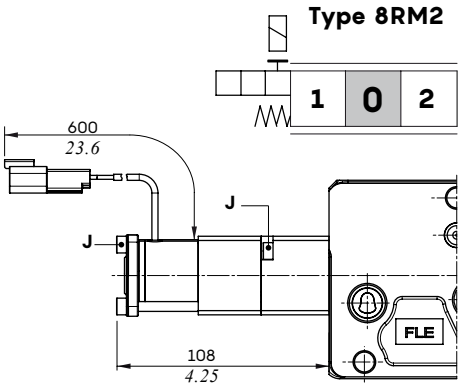

Features

Nominal voltage . . . . . : 12 VDC ± 10%
Power rating . . . . . : 5.5 W
Min. detent release . . . . . : 200 N *(45 lbf)*
Coil resistance (@ 20°C - *68°F*). : 26.2 Ohm
Coil insulance. . . . . : Class H (180°C - *356°F)*
Insertion . . . . . : 100%
Connector . . . . . : Deutsch DT04-2P
Mating connector . . . . . : Deutsch DT06-2S, code 5CON140046

Wrenches and tightening torques

J = allen wrench 4 - 6.6 Nm *(4.9 lbft)*

With microswitch for spool check in positions 1 and 2

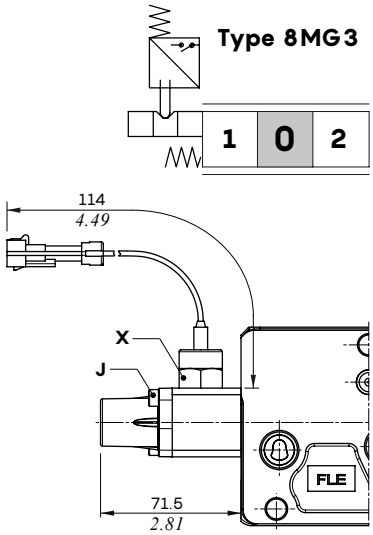

Features

Switch mechanical life . . . . . : $5x10^5$ cycles
Switch electric life . . . . . : 10^5 cycles @ 7 A - 13.5 VDC, resistive load
$5x10^4$ cycles @ 10 A - 12 VDC, resistive load
$5x10^4$ cycles @ 3 A - 28 VDC, resistive load
Connector . . . . . : Packard Weather-Pack
Mating connector . . . . . : Packard Weather-Pack, code 5CON001

Complete controls			
	Microswitch operation		
Circuit	position 1 **8MG1**	position 2 **8MG2**	position 1, 2 **8MG3**
(NO)	5V08107670	5V08107680	5V08107660
(NC)	/	/	5V08107662 (*)

Note (*): with integrated connector

Wrenches and tightening torques

J = allen wrench 4 - 6.6 Nm *(4.9 lbft)*
X = wrench 22 - 24 Nm *(17.7 lbft)*

With solenoid lock device in neutral position

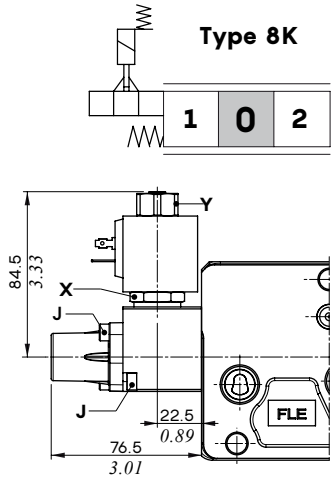

Complete controls			
	Coil connector		
Voltage	ISO 4400	Packard M-Mack	Deutsch DT04
12 VDC	5V08707212	5V08707613	5V08707412
24 VDC	5V08707224	5V08707624	5V08707424

For coil features and options see **BE** type coil at page 160.

Wrenches and tightening torques

J = allen wrench 4 - 6.6 Nm *(4.9 lbft)*
X = wrench 24 - 9.8 Nm *(7.2 lbft)*
Y = wrench 21 - 6.6 Nm *(4.9 lbft)*

Working section

"A" side spool positioners

With detent and spring return to neutral position

Type 9B
Detent in position 1
(see A curve)

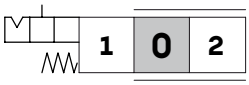

Type 10B
Detent in position 2
(see B curve)

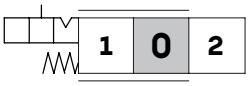

Type 11B
Detent in positions 1
(A curve) and 2 (B curve)

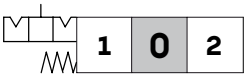

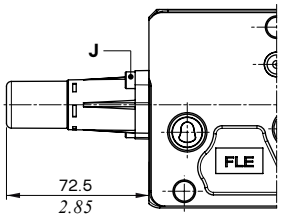

Wrenches and tightening torques
J = allen wrench 4 - 6.6 Nm *(4.9 lbft)*

Force vs. Stroke diagram

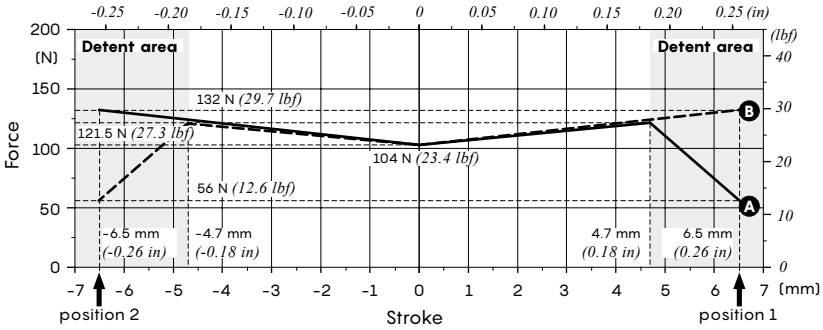

Release force 160 N ± 10 N *(36 lbf ± 2.2 lbf)*

With detent and spring return to neutral position, for floating circuit

Not available for HF (High Flow) sections.

Type 13N
Detent in position 3

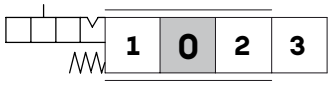

Type 13F
Additional spring in position 3

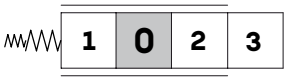

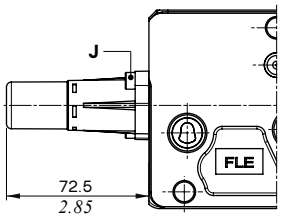

Wrenches and tightening torques
J = allen wrench 4 - 6.6 Nm *(4.9 lbft)*

Type 13N: Force vs. Stroke diagram

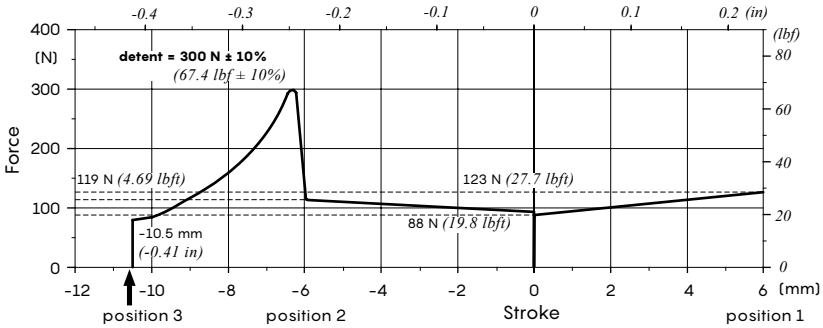

Release force from pos.3: 250 N ± 10% *(56.2 lbf ± 10%)*

Type 13F: Force vs. Stroke diagram

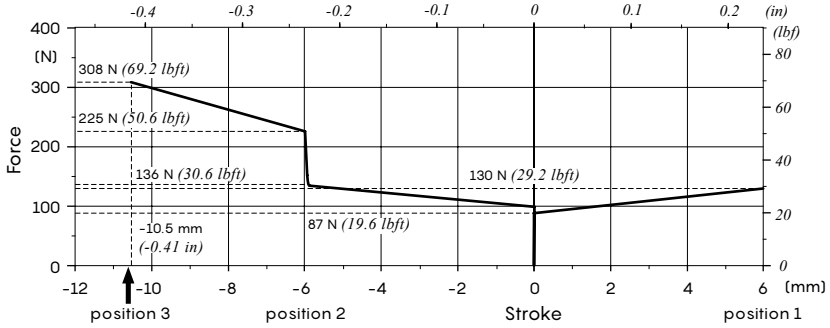

Working section

"A" side spool positioners

Proportional pneumatic control

Type 8PP

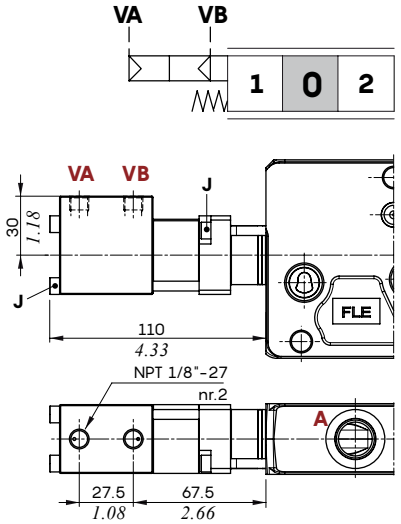

Stroke vs. Pilot pressure diagram

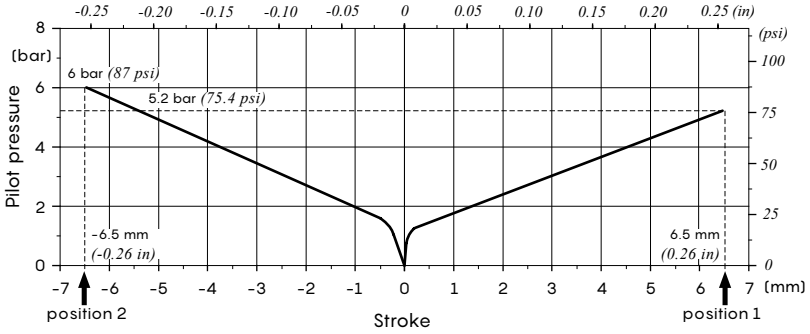

Wrenches and tightening torques
J = allen wrench 4 - 6.6 Nm *(4.9 lbft)*

On/off pneumatic control

Type 8PNB

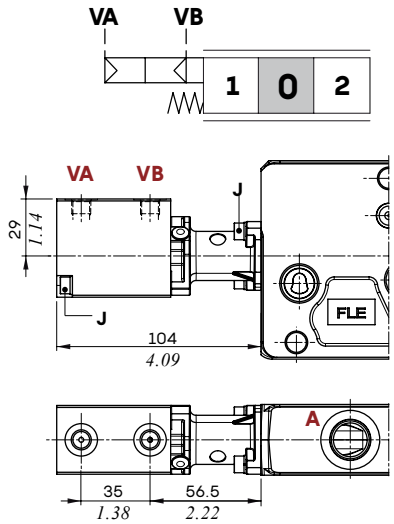

Stroke vs. Pilot pressure diagram

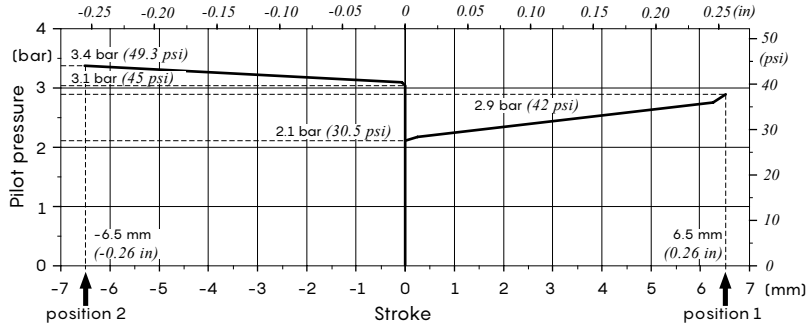

Wrenches and tightening torques
J = allen wrench 4 - 6.6 Nm *(4.9 lbft)*

Working section

"A" side spool positioners

On/off electropneumatic control

Type 8EPNB3

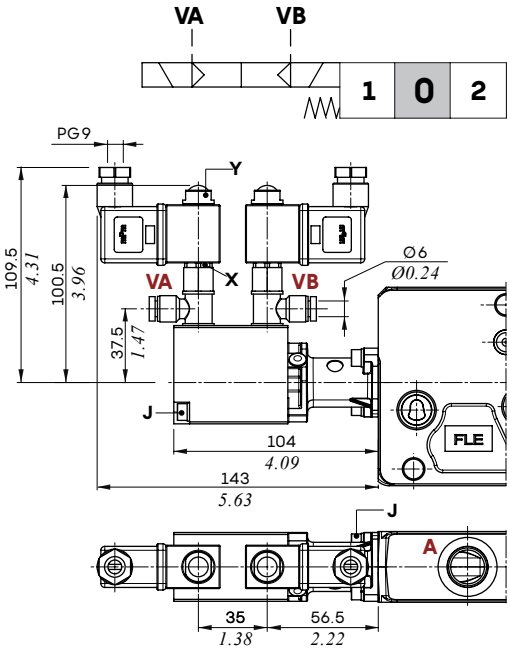

Features

Pilot pressure . . . . . : 6 bar (max. 15 bar)
87 psi (max. 218 psi)

For coil features and options see **BPV** type coil at page 160.

Wrenches and tightening torques

J = allen wrench 4 - 6.6 Nm *(4.9 lbft)*
X = wrench 15 - 6.6 Nm *(4.9 lbft)*
Y = wrench 13, manual tightening

Working section

"B" side spool control kit

Lever box

Type L

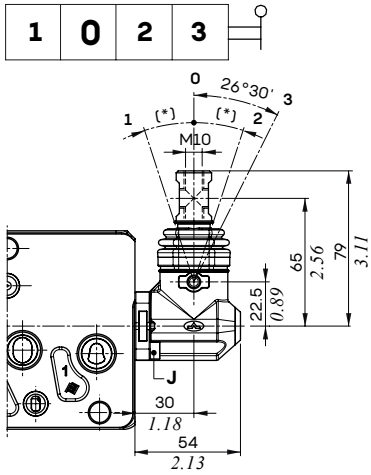

L180 configuration

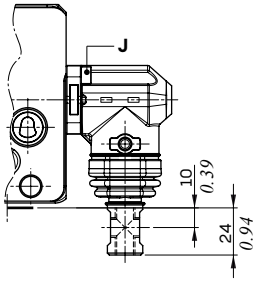

Angle (*)
16° with 8 type positioners
15° with 13 type positioners

Waterproof lever box

Type LF1
Spool stroke limiter
on A port

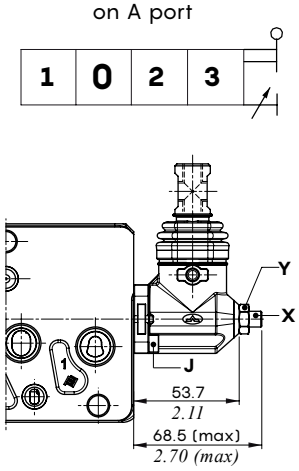

Type LSG

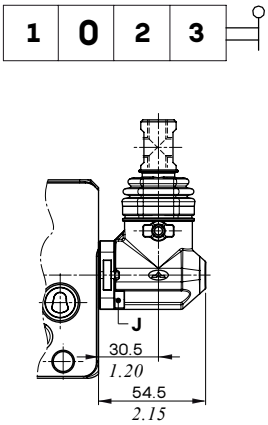

Type LSGF1
Spool stroke limiter
on A port

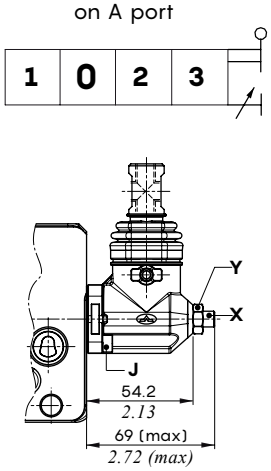

Wrenches and tightening torques
J = allen wrench 4 - 6.6 Nm *(4.9 lbft)*
X = allen wrench 4
Y = wrench 13 - 24 Nm *(17.7 lbft)*

Without lever box

Type TQ
Flexible cable connection

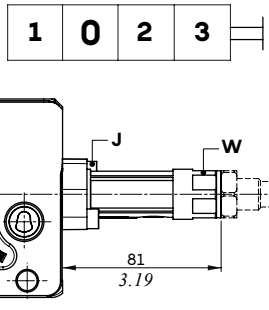

CD or CG cable types

Type SLP
With dust-proof plate

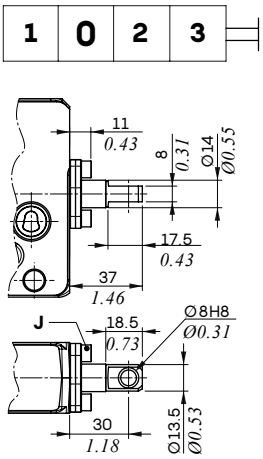

Type SLC
With endcap

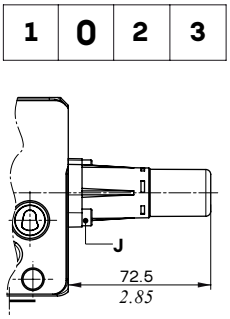

Wrenches and tightening torques
J = allen wrench 4 - 6.6 Nm *(4.9 lbft)*
W = wrench 24

Working section

"B" side spool control kit

Joysticks for two section operation

Not available for HF (High Flow) sections.

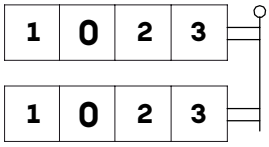

Type LCA1-4

LCA1 configuration

Type LCA2-3

LCA2 configuration

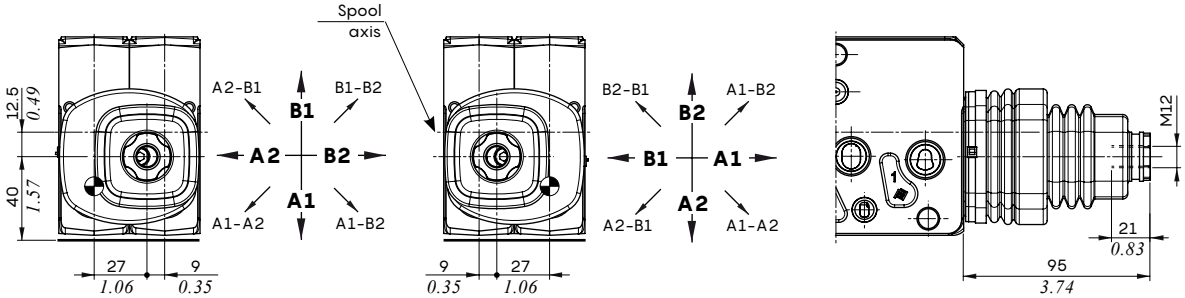

LCA4 configuration

LCA3 configuration

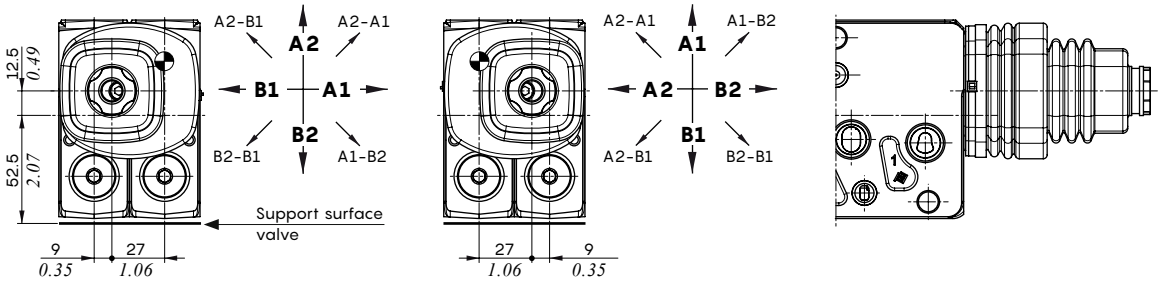

LCA2 configuration example

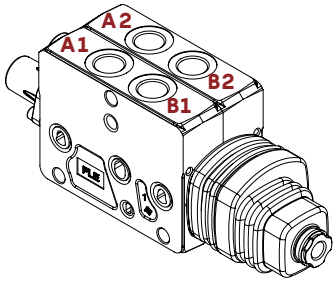

Working angles

Horizontal axis

Vertical axis

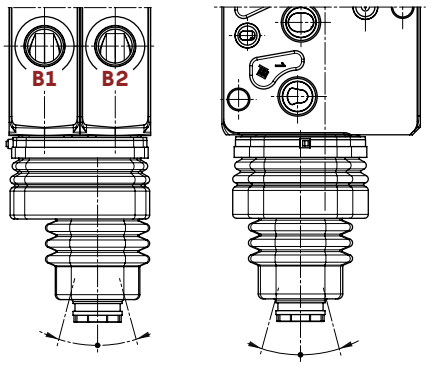

Max. working angles	Horizontal axis	Vertical axis
Single action operation	15°4'	15°4'
Single action operation with floating	25°2'	25°2'
Two section operation	15°52'	15°52'
Two section operation with floating	18°3'	18°3'

Working section

Proportional hydraulic control

Types 8IMN - 8IMXN

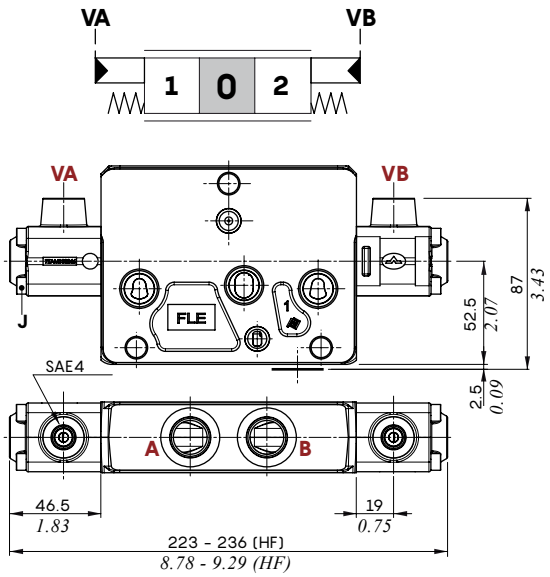

Types 8IMF3N - 8IMXF3N

With spool stroke limiter on A and B ports

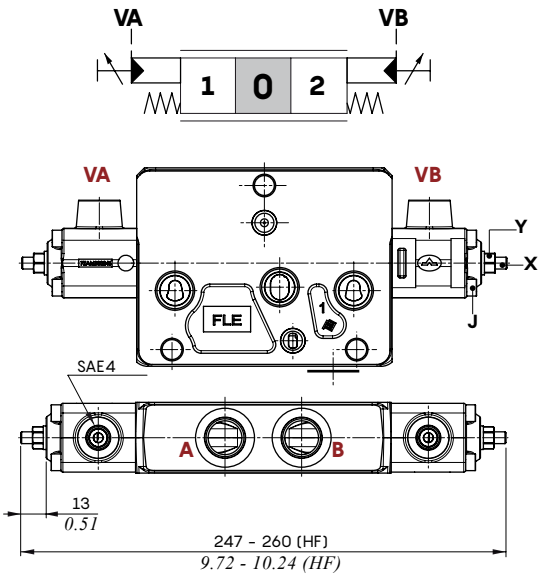

Wrenches and tightening torques

J = allen wrench 4 - 6.6 Nm *(4.9 lbft)*

X = allen wrench 3

Y = wrench 10 - 9.8 Nm *(7.2 lbft)*

Suggested pressure control curve: type 089

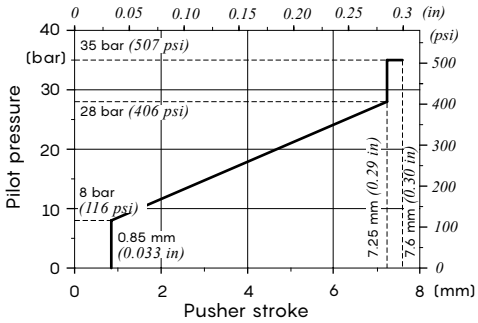

Features (all types)

Max. pressure . . . . . : 70 bar *(1015 psi)*

Pressure vs. Stroke diagram

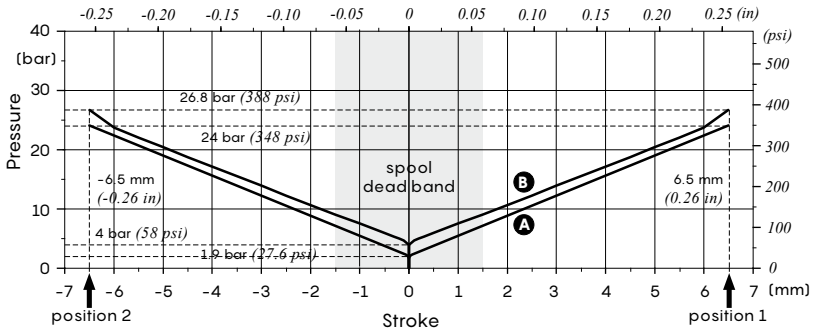

Diagram A = 8IMXN-8IMXNF3 controls

Diagram B = 8IMN-8IMNF3 controls

Suggested pressure control curve: type 054

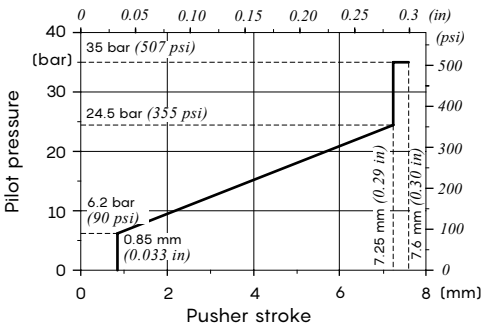

Working section

Proportional hydraulic control

Not available for HF (High Flow) sections.

Type 13IMS

For floating circuit

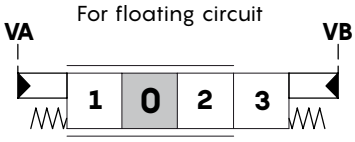

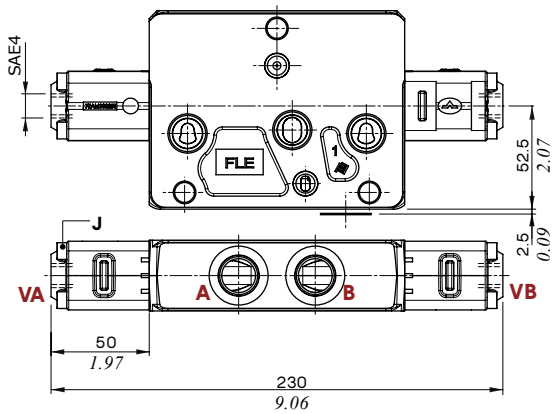

Features

Max. pressure . . . . . : 70 bar *(1015 psi)*

Suggested pressure control curve: type 089

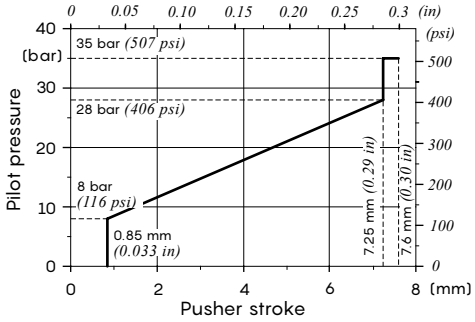

Wrenches and tightening torques

J = allen wrench 4 - 6.6 Nm *(4.9 lbft)*

Stroke vs. Pressure diagram

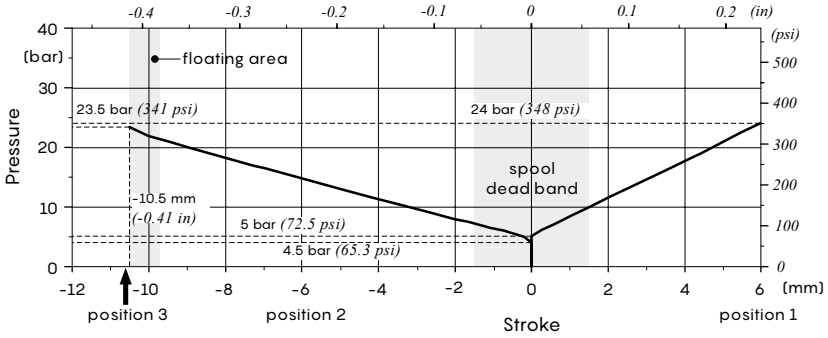

Suggested pressure control curve on port VB: type 086

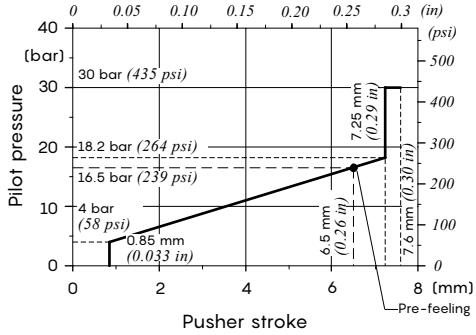

Working section

On/off solenoid control

Not available for HF (High Flow) sections.

Type 8ES3
Double acting

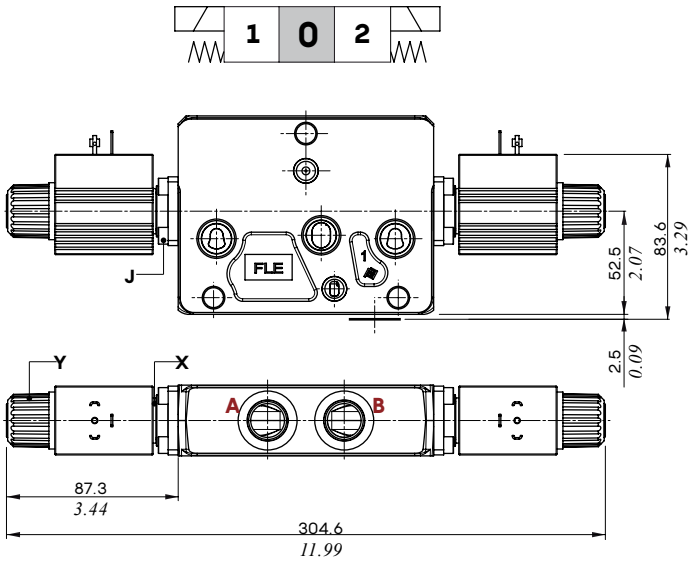

Type 8ES1
Single acting in A

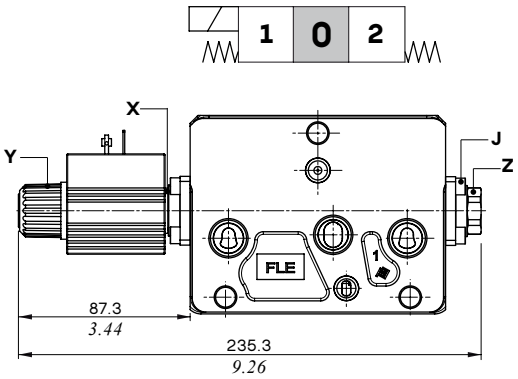

Type 8ES2
Single acting in B

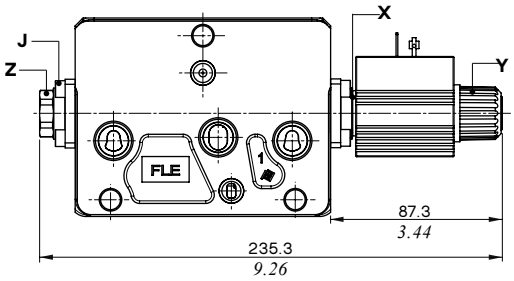

Features

Max. flow on working ports.: **60 l/min** *(16 US gpm)*
Internal leakage A(B)⇒T . . . . : 15 cm³/min @ 100 bar and 20°C
(0.92 in³/min @ 1450 psi and 68°F)

For coil features and options see **D12** type coil at page 160.

Type 8ES3F3
Double acting, with spool stroke limiter on A and B ports

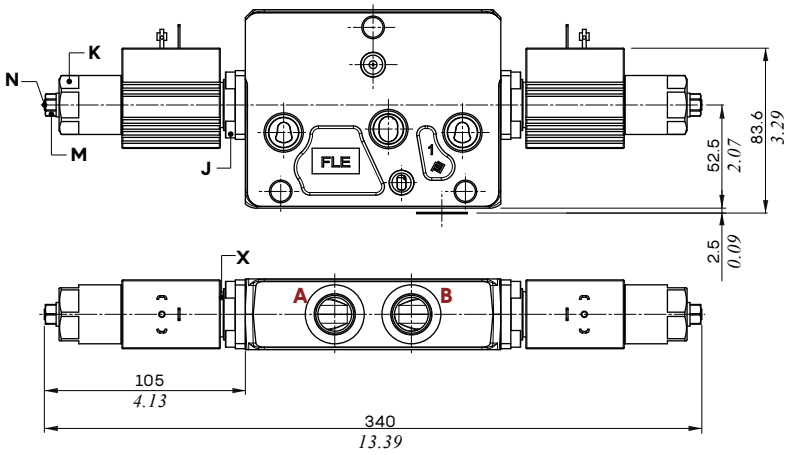

Wrenches and tightening torques

J = allen wrench 4 - 6.6 Nm *(4.9 lbft)*
K = wrench 27 - 17 Nm *(12.5 lbft)*
M = wrench 10 - 9.8 Nm *(7.2 lbft)*
N = allen wrench 3
Y = special wrench - 6.6 Nm *(4.9 lbft)*
Z = wrench 22 - 24 Nm *(17.7 lbft)*

Electrohydraulic control performace data

Following specifications are measured with:
· mineral oil of 46 mm²/s *(46 cSt)* viscosity at 40°C *(104°F)* temperature.
· standard spools, connecting P⇒A⇒B⇒T ports without flow multiplication
· 12 VDC and 24 VDC nominal voltage with ± 10% tolerance.

Following electrohydraulic controls need CED400W electronic unit; for information please contact Sales Department.

Specifications		Spool control type			
		8EB3	13EB3	8EZ3	13EZ3
Electric specifications					
Coil impedance	12 VDC	4.72 Ω	4.72 Ω	4.72 Ω	4.72 Ω
	24 VDC	20.8 Ω	20.8 Ω	20.8 Ω	20.8 Ω
Max. operating current	12 VDC	1.5 A	1.5 A	1.5 A	1.5 A
	24 VDC	0.75 A	0.75 A	0.75 A	0.75 A
No load current consumption		0	0	0	0
				With lever box configured controls	
Hysteresis max. (1)	external drain	3% 5% with lever	4% 7% with lever	7%	7%
	internal drain	4% 6% with lever	6% 9% with lever	9%	9%
Time response	from 0 ⇒ 100% and from 100% ⇒ 0 of stroke	< 50 ms	< 55 ms	< 50 ms	< 55 ms
Min. flow control signal	12 VDC	700 mA	440 mA	700 mA	700 mA
	24 VDC	350 mA	220 mA	350 mA	350 mA
Flow control signal	12 VDC	1250 mA	760 mA	1250 mA	840 mA
	24 VDC	625 mA	380 mA	625 mA	420 mA
Max. float flow control signal	12 VDC		880 mA		1020 mA
	24 VDC		440 mA		510 mA
Dither frequency	low frequency	150 Hz		150 Hz	
	high frequency	180 Hz - 200 mA		180 Hz - 200 mA	
Insertion		100%		100%	
Coil insulance		Class H (180°C - *356°F*)		Class H (180°C - *356°F*)	
Connector type		AMP JPT - Deutsch DT		AMP JPT - Deutsch DT	
Weather protection (connector)		IP65 (JPT type) - IP69K (DT type)		IP65 (JPT type) - IP69K (DT type)	
Hydraulic specifications					
Max. pressure		40 bar *(580 psi)*		50 bar *(725 psi)*	
Max. back pressure		10 bar *(145 psi)*		10 bar *(145 psi)*	

Note (1) hysteresis is indicated at nominal supply voltage and f = 0.008 Hz for one cycle (one cycle = neutral ⇒ full A ⇒ neutral ⇒ full B ⇒ neutral).
For the calculation rules see "Appendix A" on page 170.

Working section

Electrohydraulic control performace data

Types 8EB3T-8EZ3: Stroke vs. Current diagram

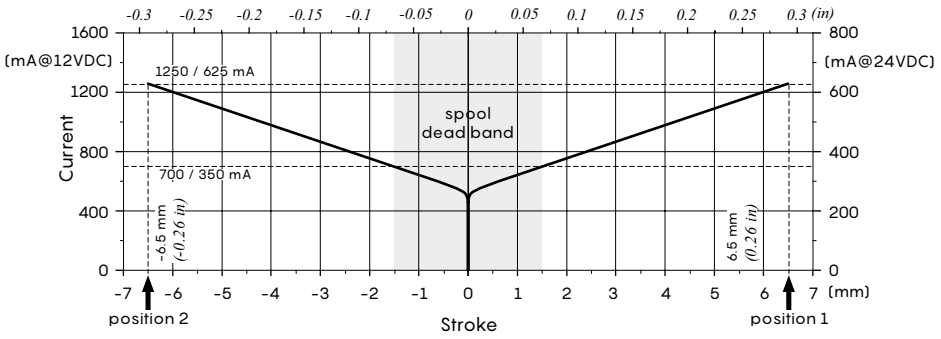

Types 13EB3T-13EZ3: Stroke vs. Current diagram

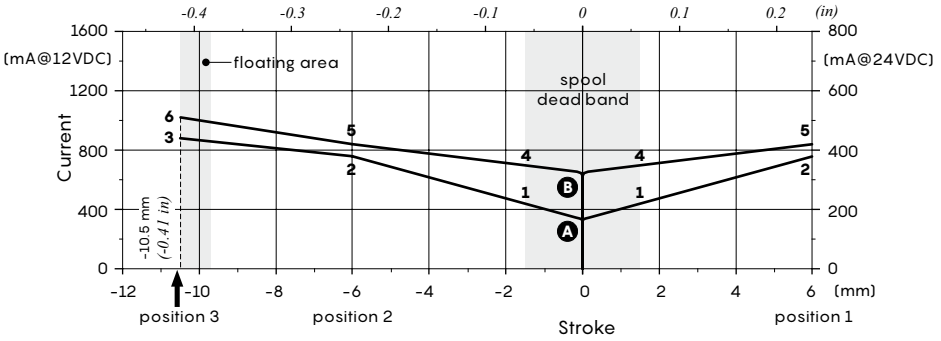

A curve = 13EB3T control
1 = 440 mA a 12 VDC - 220 mA a 24 VDC
2 = 760 mA a 12 VDC - 380 mA a 24 VDC
3 = 880 mA a 12 VDC - 440 mA a 24 VDC

B curve = 13EZ3 control
4 = 700 mA a 12 VDC - 350 mA a 24 VDC
5 = 840 mA a 12 VDC - 420 mA a 24 VDC
6 = 1020 mA a 12 VDC - 510 mA a 24 VDC

Electrohydraulic controls: spool position sensor

The sensor can be ordered exclusively through the electrohydraulic EB and EZ type controls; see pages 70-71-103 for available control -list.

SPSL sensor

The SPSL position sensor converts the spool movements into a voltage linear signal.

Working conditions		
Voltage supply		5 VDC
Current absorption		< 10 mA (no load)
Mechanical life		3x10⁶
Connector type		DT04-4P Deutsch
Weather protection		IP67 / IP69K
Working temperature		from -40°C to 105°C *(from -40°F to 221°F)*
Working pressure		350 bar *(5100 psi)*
Max. electrical stroke		±10 mm *(±0.39 in)*
Max. mechanical stroke		±10 mm *(±0.39 in)*
Output signal	range	from 0.5 to 4.5 V
	linearity	± 5%
	spool in neutral	2.5 ± 0.2 V
	max. current	1 mA
EMC compatibility		ISO 13766 / ISO 14982
Mechanical vibrations, shock, bumps		IEC 68-2-6,-27,-29

SPSL sensor output signal

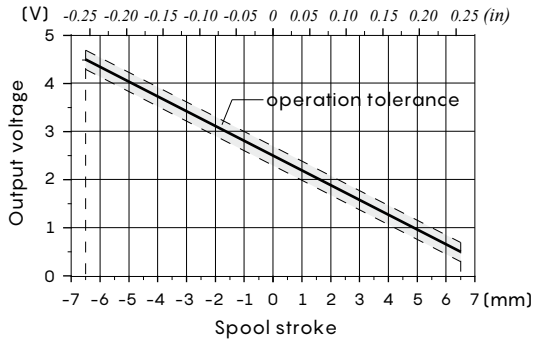

Deutsch DT04-4P connector	
Pin	**Function**
1	+ 5V
2	not connected
3	GND
4	signal OUT

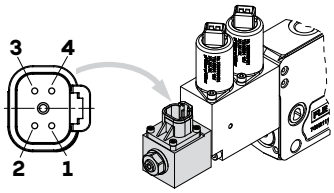

Deutsch DT06-4S mating connector, code 5CON140072

SPSD sensor

The SPSD position sensor converts the spool movements into an electric digital signal.

Working conditions		
Voltage supply		from 9 to 32 VDC
Current absorption		< 10 mA (no load)
Mechanical life		3x10⁶
Connector type		DT04-4P Deutsch
Weather protection		IP67 / IP69K
Working temperature		from -40°C to 105°C *(from -40°F to 221°F)*
Working pressure		350 bar *(5100 psi)*
Max. electrical stroke		±10 mm *(±0.39 in)*
Max. mechanical stroke		±10 mm *(±0.39 in)*
Output signal	type	PNP
	max. current	6 mA
EMC compatibility		ISO 13766 / ISO 14982
Mechanical vibrations, shock, bumps		IEC 68-2-6,-27,-29

SPSD sensor output signal

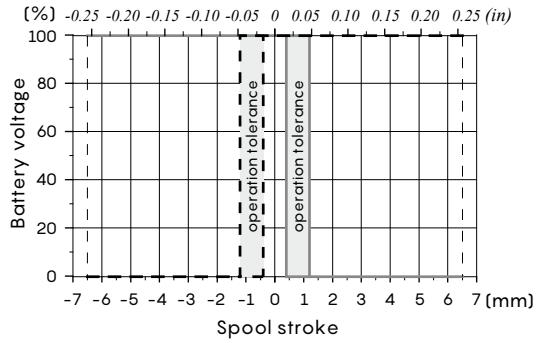

Deutsch DT04-4P connector	
Pin	**Function**
1	Out A
2	GND
3	VB +
4	Out B

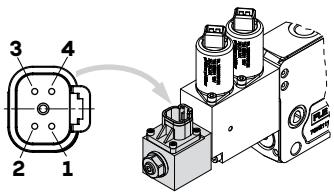

Deutsch DT06-4S mating connector, code 5CON140072

Working section

Two-side electrohydraulic control

Control types

❶: With AMP JPT connector - AMP JPT mating connector, code: 5CON003

❷: With Deutsch DT04 connector - Deutsch DT06-2S mating connector code: 5CON140031

13EB3 type controls are not available for HF sections.

Wrenches and tightening torques

J = allen wrench 4 - 6.6 Nm *(4.9 lbft)*
H = allen wrench 3 - 6.6 Nm *(4.9 lbft)*
K = allen wrench 3 - 5 Nm *(3.7 lbft)*
Z = wrench 29 - 24 Nm *(17.7 lbft)*
W = wrench 8
X = allen wrench 3
Y = wrench 10 - 9.8 Nm *(7.2 lbft)*

Types 8EB3T - 8EB34T
Without lever control

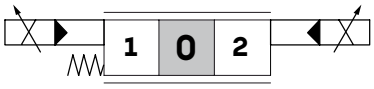

Types 13EB3T - 13EB34T
For floating circuit

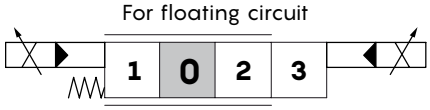

Types 8EB3TF3 - 8EB34TF3
With spool stroke limiter

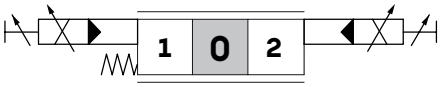

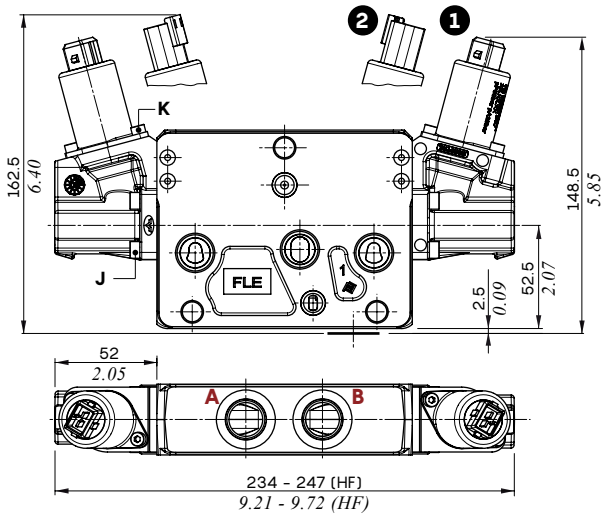

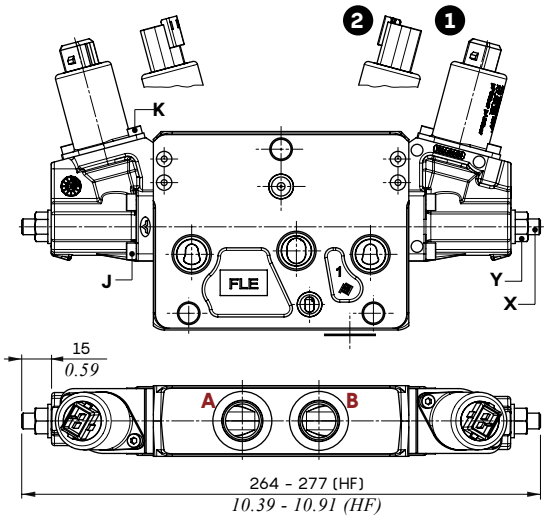

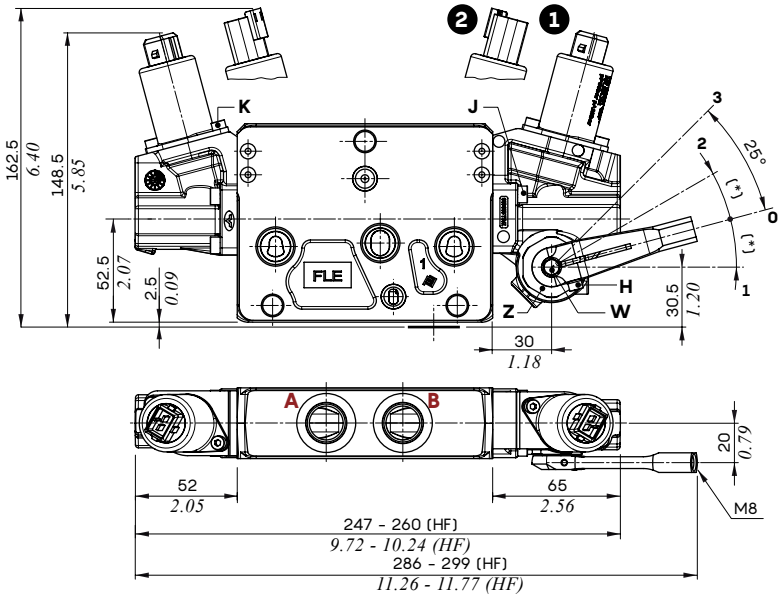

Types 8EB3TLH - 8EB34TLH
Lever control

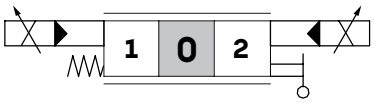

Types 13EB3TLH - 13EB34TLH
For floating circuit

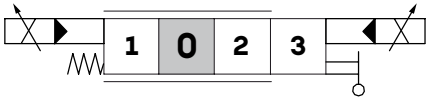

Angle (*)
15° with 8EB3.. type controls
14° with 13EB3.. type controls

Working section

Two-side electrohydraulic control

Control types

❶: With AMP JPT connector - AMP JPT mating connector, code: 5CON003

❷: With Deutsch DT04 connector - Deutsch DT06-2S mating connector code: 5CON140031

13EB3 type controls are not available for HF sections.

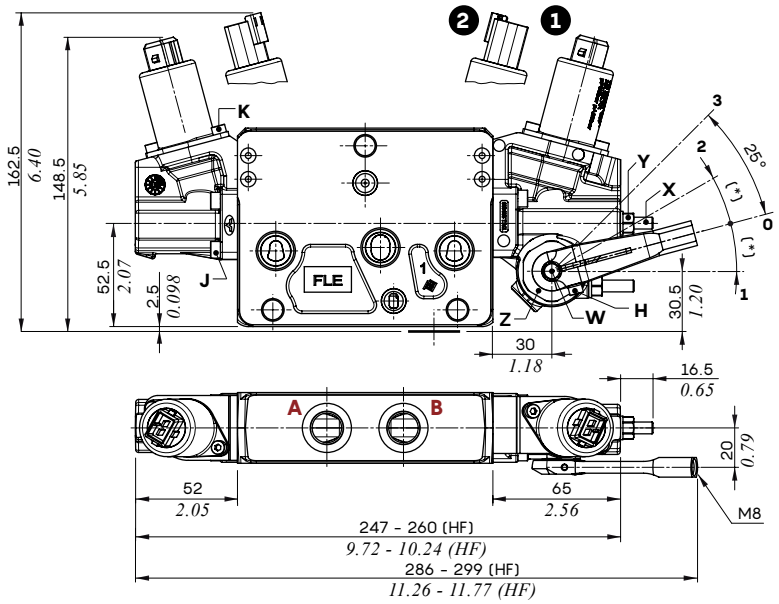

Angle (*): 15° with 8EB3.. type controls; 14° with 13EB3.. type controls

Types 8EB3TLHF3 - 8EB34TLHF3
Lever control with spool stroke limiter

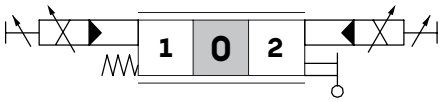

Types 13EB3TLHF3 - 13EB34TLHF3
For floating circuit

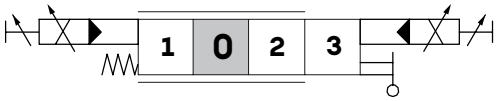

Wrenches and tightening torques

H = allen wrench 3 - 6.6 Nm *(4.9 lbft)*
J = allen wrench 4 - 6.6 Nm *(4.9 lbft)*
K = allen wrench 3 - 5 Nm *(3.7 lbft)*
M = allen wrench 4 - 9.8 Nm *(7.2 lbf)*
N = wrench 17 - 9.8 Nm *(7.2 lbft)*
X = allen wrench 3
Y = wrench 10 - 9.8 Nm *(7.2 lbft)*
Z = wrench 29 - 24 Nm *(17.7 lbft)*
W = wrench 8

Note: for more dimensions see previous pages

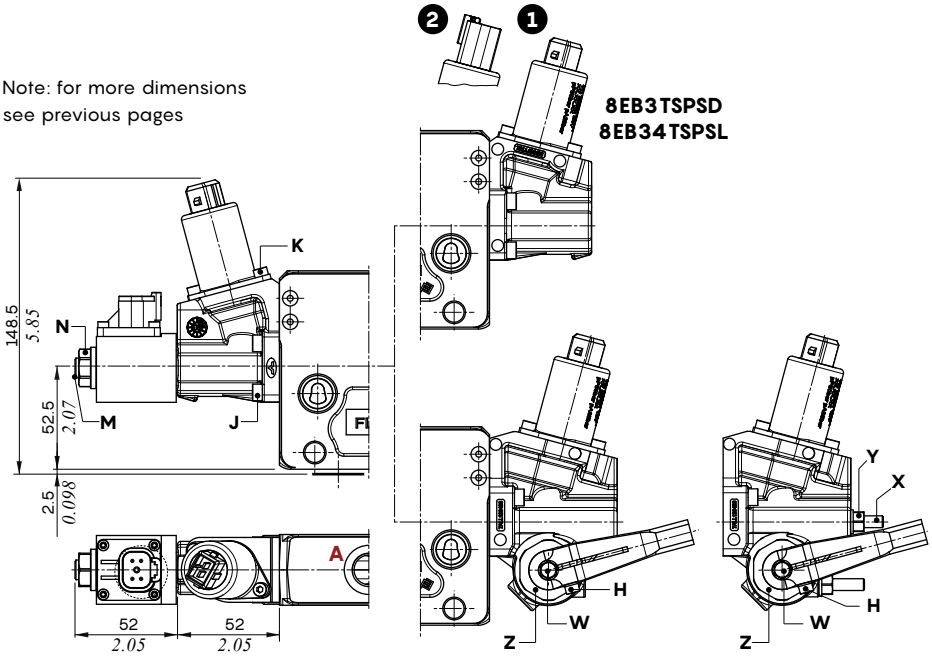

Type 8EB3TSPSD
Without lever control and digital output sensor SPSD

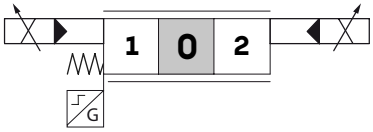

Type 8EB34TSPSL
Without lever control and analog output sensor SPSL

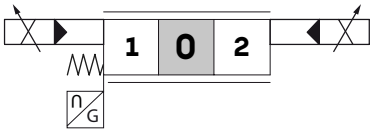

Type 8EB3TLHSPSD
With lever control and digital output sensor SPSD

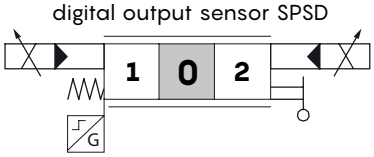

Type 8EB3TLHF3SPSL
Analog output sensor SPSL, with lever control and spool stroke limiter

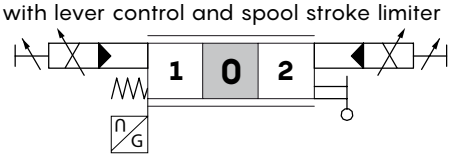

Working section

One-side electrohydraulic control: "A" side

Control types

❶: With AMP JPT connector - AMP JPT mating connector, code: 5CON003

❷: With Deutsch DT04 connector - Deutsch DT06-2S mating connector code: 5CON140031

Types 8EZ3 - 8EZ34

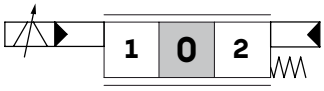

Types 13EZ3 - 13EZ34

For floating circuit

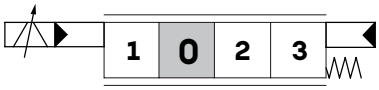

Types 8EZ3SPSD - 8EZ34SPSD

Digital output sensor SPSD

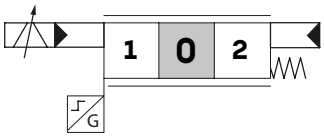

Type 8EZ34SPSL

Analog output sensor SPSL

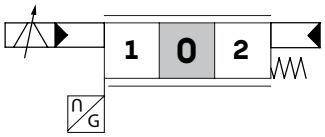

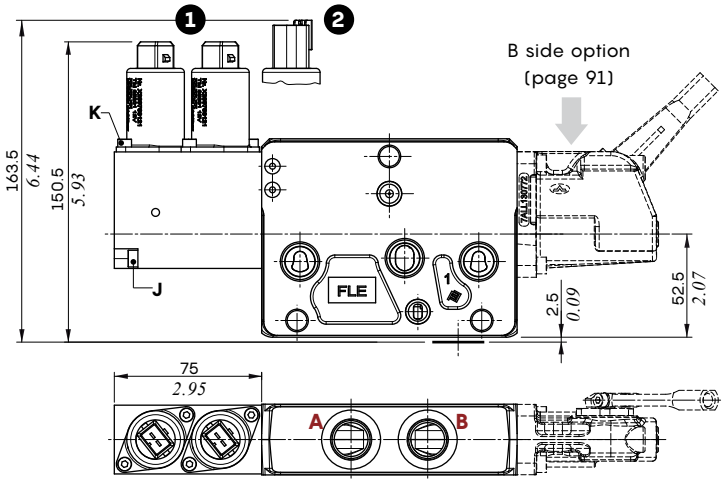

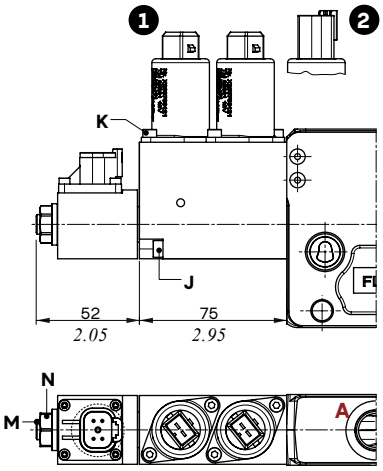

Types 8EZH3 - 8EZH34

With horizontal pressure reducing valves

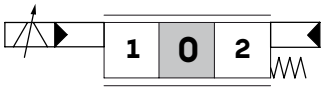

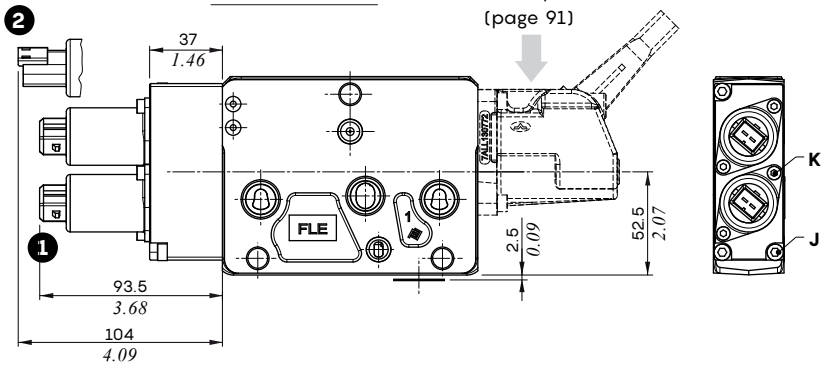

Wrenches and tightening torques

J = allen wrench 4 - 6.6 Nm *(4.9 lbft)*

K = allen wrench 3 - 5 Nm *(3.7 lbft)*

M = allen wrench 4 - 9.8 Nm *(7.2 lbft)*

N = wrench 17 - 9.8 Nm *(7.2 lbft)*

Working section

One-side electrohydraulic control: "B" side option

These options are available for one-side electyrohydraulic controls only

Type LQ
Lever box

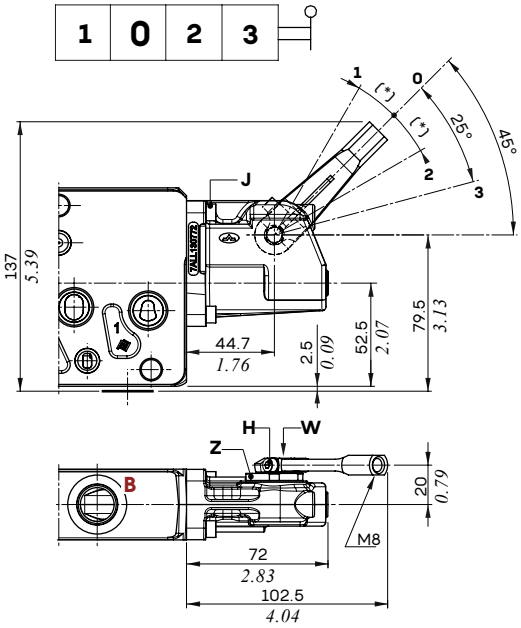

Type LQF3
Spool stroke limiter on A and B ports

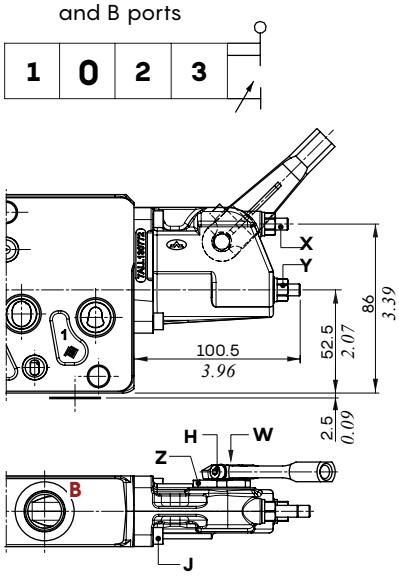

Angle (*)
15° with 8EZ3.. type controls
14° with 13EZ3.. type controls

Type LQSL
Lever box, without lever

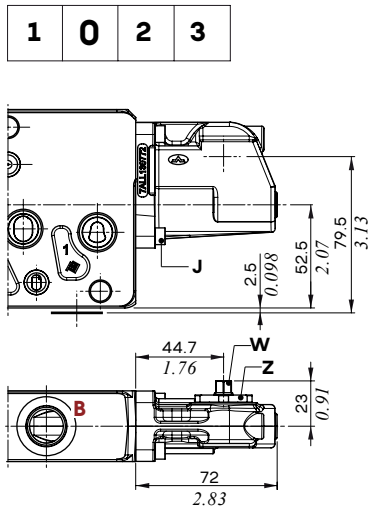

Wrenches and tightening torques

H = allen wrench 3 - 6.6 Nm *(4.9 lbft)*
J = allen wrench 4 - 6.6 Nm *(4.9 lbft)*
X = allen wrench 3
Y = wrench 10 - 9.8 Nm *(7.2 lbft)*
Z = wrench 29 - 24 Nm *(17.7 lbft)*
W = wrench 8

Working section

Complete one-side electrohydraulic control

Controls already comprehensive of endcap on B side.

Control types

❶: With AMP JPT connector - AMP JPT mating connector, code: 5CON003

❷: With Deutsch DT04 connector - Deutsch DT06-2S mating connector code: 5CON140031

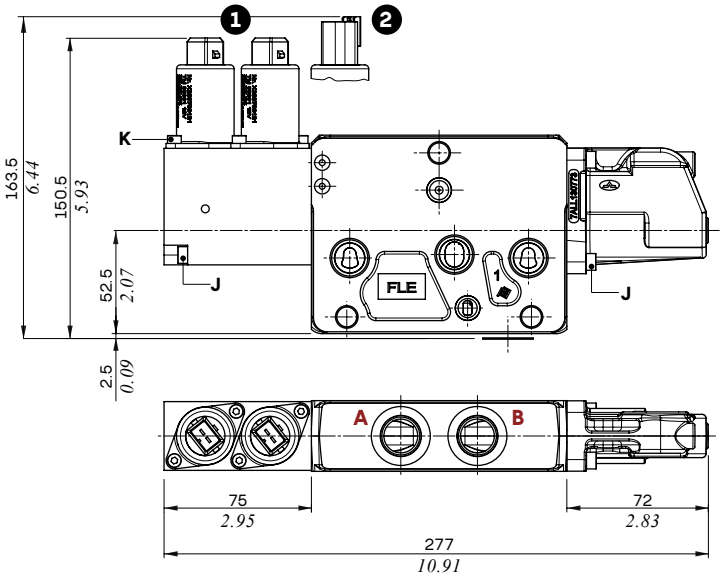

Types
8EZ3SLCQ - 8EZ34SLCQ
Without lever control

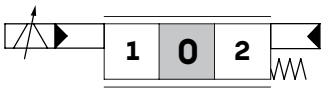

Types
13EZ3SLCQ - 13EZ34SLCQ
For floating circuit

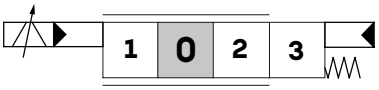

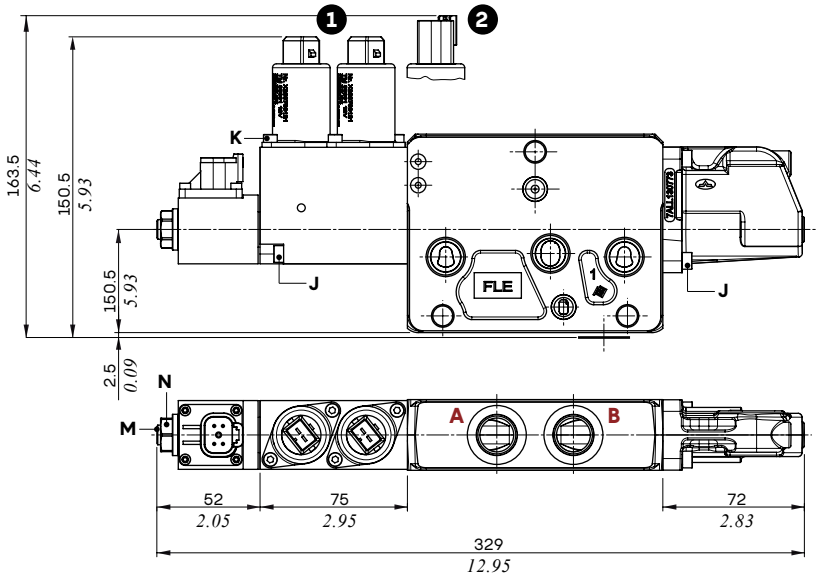

Types
8EZ3SPSDSLCQ - 8EZ34SPSDSLCQ
Digital output sensor SPSD

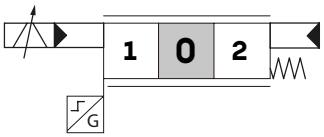

Type 8EZ34SPSLSLCQ
Analog output sensor SPSL

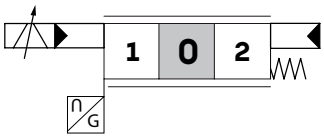

Wrenches and tightening torques

J = allen wrench 4 - 6.6 Nm *(4.9 lbft)*
K = allen wrench 3 - 5 Nm *(3.7 lbft)*
M = allen wrench 4 - 9.8 Nm *(7.2 lbft)*
N = wrench 17 - 9.8 Nm *(7.2 lbft)*

Working section

Complete one-side electrohydraulic control

Controls already comprehensive of endcap on B side.

Control types

1 : With AMP JPT connector - AMP JPT mating connector, code: 5CON003

2 : With Deutsch DT04 connector - Deutsch DT06-2S mating connector code: 5CON140031

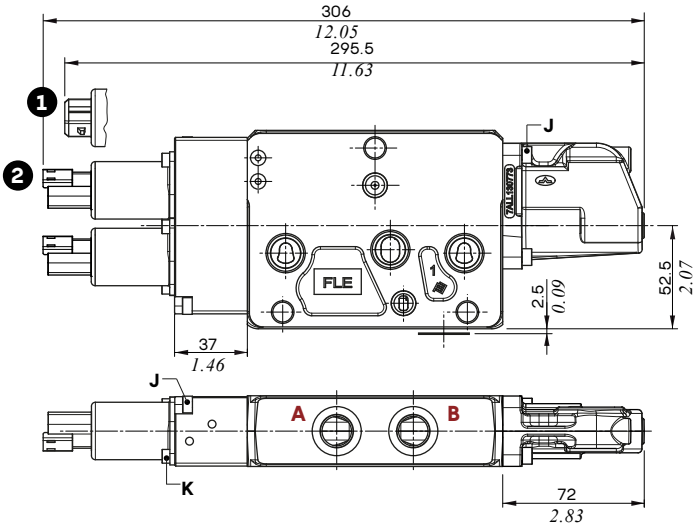

Type 8EZH34SLCQ

With horizontal pressure reducing valves

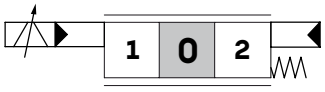

Wrenches and tightening torques

J = allen wrench 4 - 6.6 Nm *(4.9 lbft)*

K = allen wrench 3 - 5 Nm *(3.7 lbft)*

Note: The control configuration with AMP coil is available on request.
Please, contact Walvoil Sales Department.

Working section

Port valves

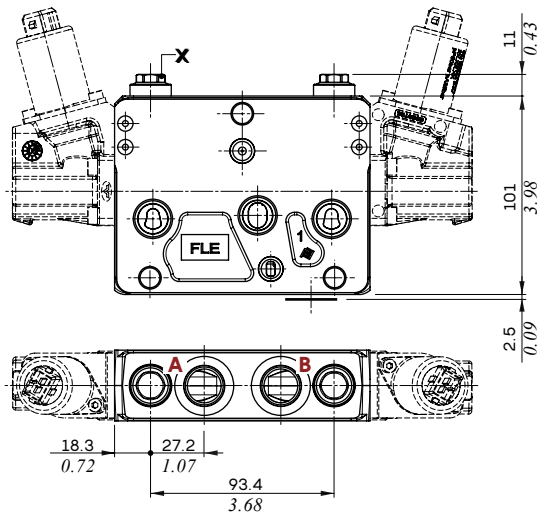

Type U valve:
antishock valves with prefill

Type C valve:
anticavitation

Wrenches and tightening torques
X = wrench 13 - 24 Nm *(17.7 lbft)*

Type U: antishock valves with prefill

Setting example
(10 l/min - *2.6 Us gpm*)

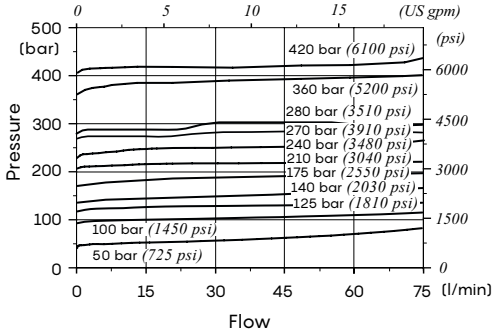

Type C: anticavitation valves

Pressure drop

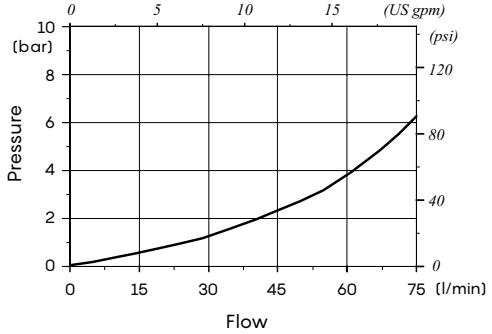

Pressure drop
(in anticavitation)

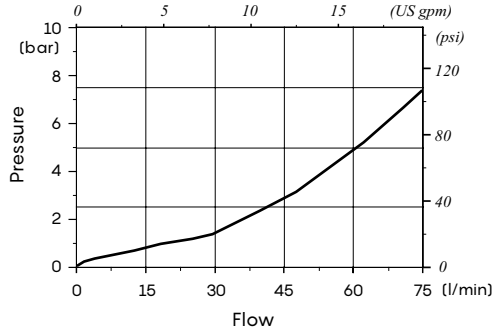

Outlet section part ordering codes

A For mechanical, proportional hydraulic and solenoid controls configuration:

DPX100 / RF (04) - .....

1 1 5

B For electrohydraulic control configuration:

DPX100 / RDN (VBT) - NOTAP(VL) - .....

1 2 3

DPX100 / RDR (VBT \ 03 \ RT) - TAP(VL) - .....

1 2 1 4 3

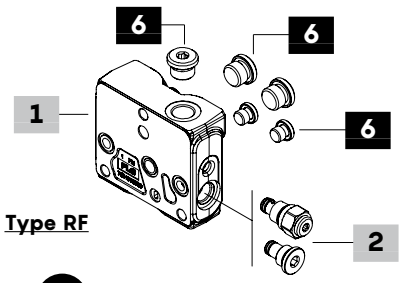

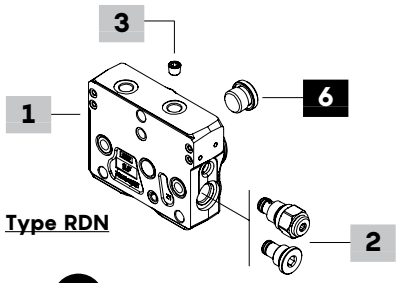

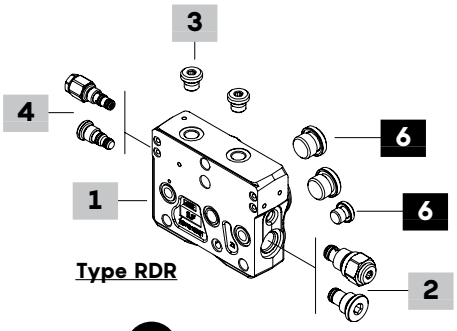

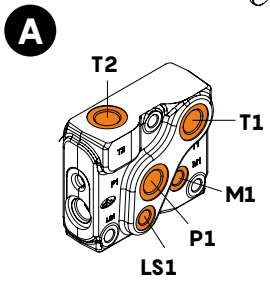

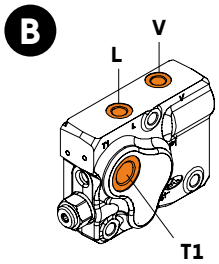

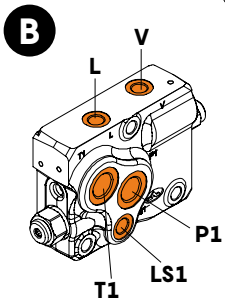

1 Outlet section kit * page 96

Outlet section is the same type for standard and High Pressure valve

For mechanical, proportional hydraulic and solenoid controls

TYPE: **DPX100/RF-SAE** CODE: YFIA204700S
DESCRIPTION: With T2 upper port
TYPE: **DPX100/RF(04)-SAE** CODE: YFIA204705S
DESCRIPTION: With T2 upper port and P1, T1, LS1, M1 side ports

For electrohydraulic controls

TYPE: **DPX100/RDN-SAE** CODE: YFIA204791S
DESCRIPTION: Without pressure reducing valve arrangement, T1 side and V-L upper ports
TIPO: **DPX100/RDR-SAE** CODE: YFIA204707S
DESCRIPTION: With pressure reducing valve arrangement, V and L upper ports, T1 side port
TYPE: **DPX100/RDR(03)-SAE** CODE: YFIA204702S
DESCRIPTION: With pressure reducing valve arrangement, V and L upper ports, P1, T1, LS1 side ports

Note: for outlet sections with different port arrangement please contact Sales Dpt.

2 Bleed valve page 97

TYPE	CODE	DESCRIPTION
(-)	X138810000V	Bleed valve
(VBT)	XTAP525320V	Valve blanking plug

3 Pilot and drain *

TYPE	CODE	DESCRIPTION
NOTAP(VL)	4TAP310007	M10x1 DIN906 plug, for external drain
-	XTAP81713V	SAE6 plug, nr.2 for int.pilot and drain

4 Pressure reducing valve page 97

TYPE	CODE	DESCRIPTION
(-)	X219740035V	Pressure reducing valve, 30-45 bar *(435-650 psi)*
(RT)	XTAP418350V	Valve blanking plug

5 Section threading

Only specify if it is different from **BSP** standard (see page 7)

6 Parts *

CODE	DESCRIPTION
3XTAP826160	SAE10 plug, nr.1 for RF and RDN section, nr.2 for RDR(03) section, nr.3 for RF(04) section
3XTAP817130	SAE6 plug, nr.1 for RDR(03) section, nr.2 for RF(04) section

NOTE (*): Codes are referred to **UN-UNF** thread.
NOTE (-): "TYPE" omitted in outlet section description

Outlet section

Dimensions and hydraulic circuit

Example of RF(04) outlet section

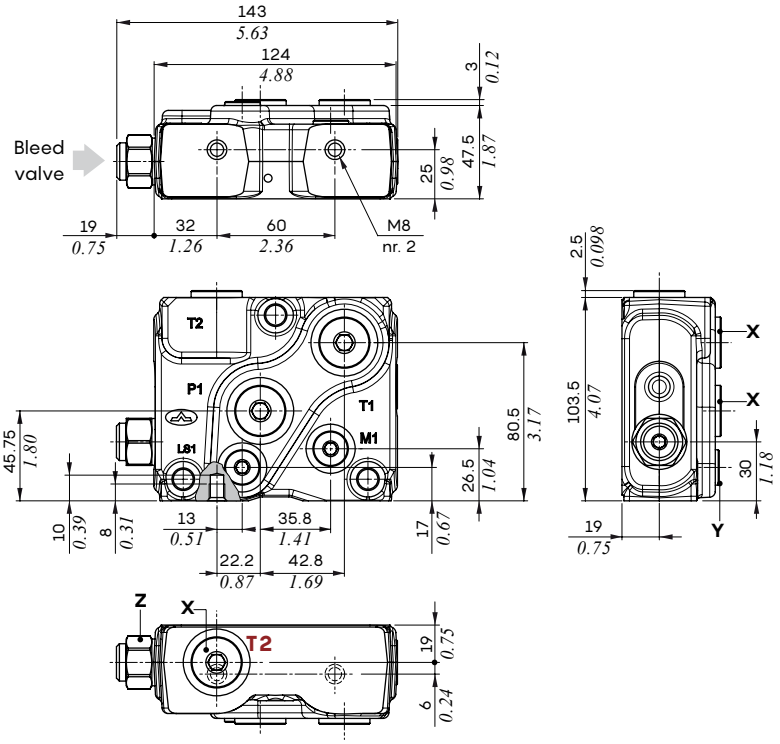

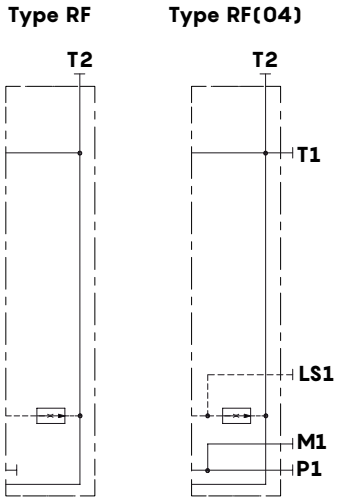

Wrenches and tightening torques

X = allen wrench 8 - 24 Nm *(17.7 lbft)*
Y = allen wrench 6 - 24 Nm *(17.7 lbft)*
Z = wrench 24 - 42 Nm *(31 lbft)*

Example of RDN outlet section

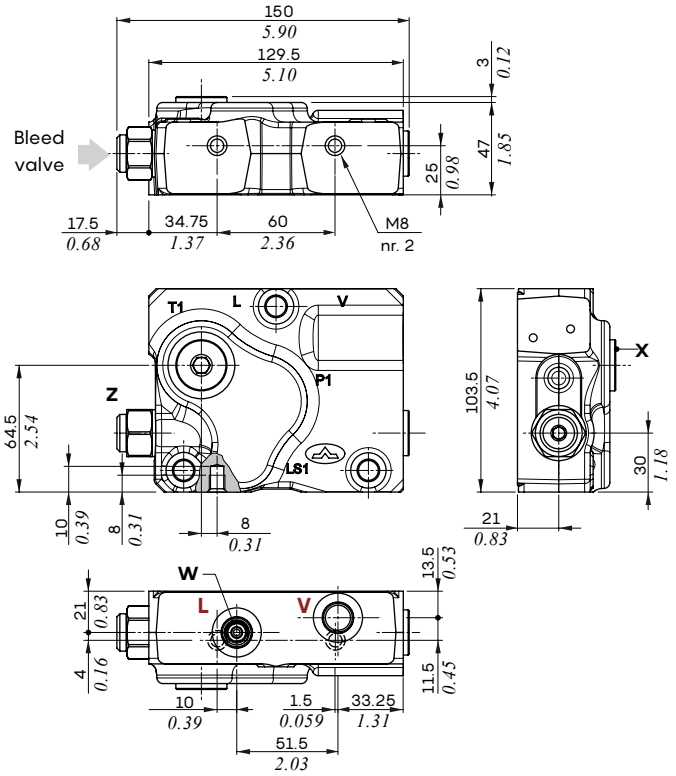

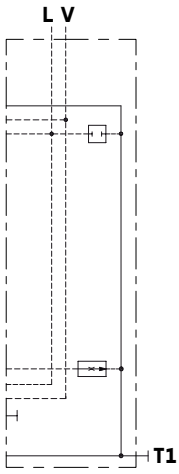

Wrenches and tightening torques

X = allen wrench 8 - 24 Nm *(17.7 lbft)*
Z = wrench 24 - 42 Nm *(31 lbft)*
W = allen wrench 5 - 9.8 Nm *(7.2 lbft)*

Dimensions and hydraulic circuit

Example of RDR(03) outlet section

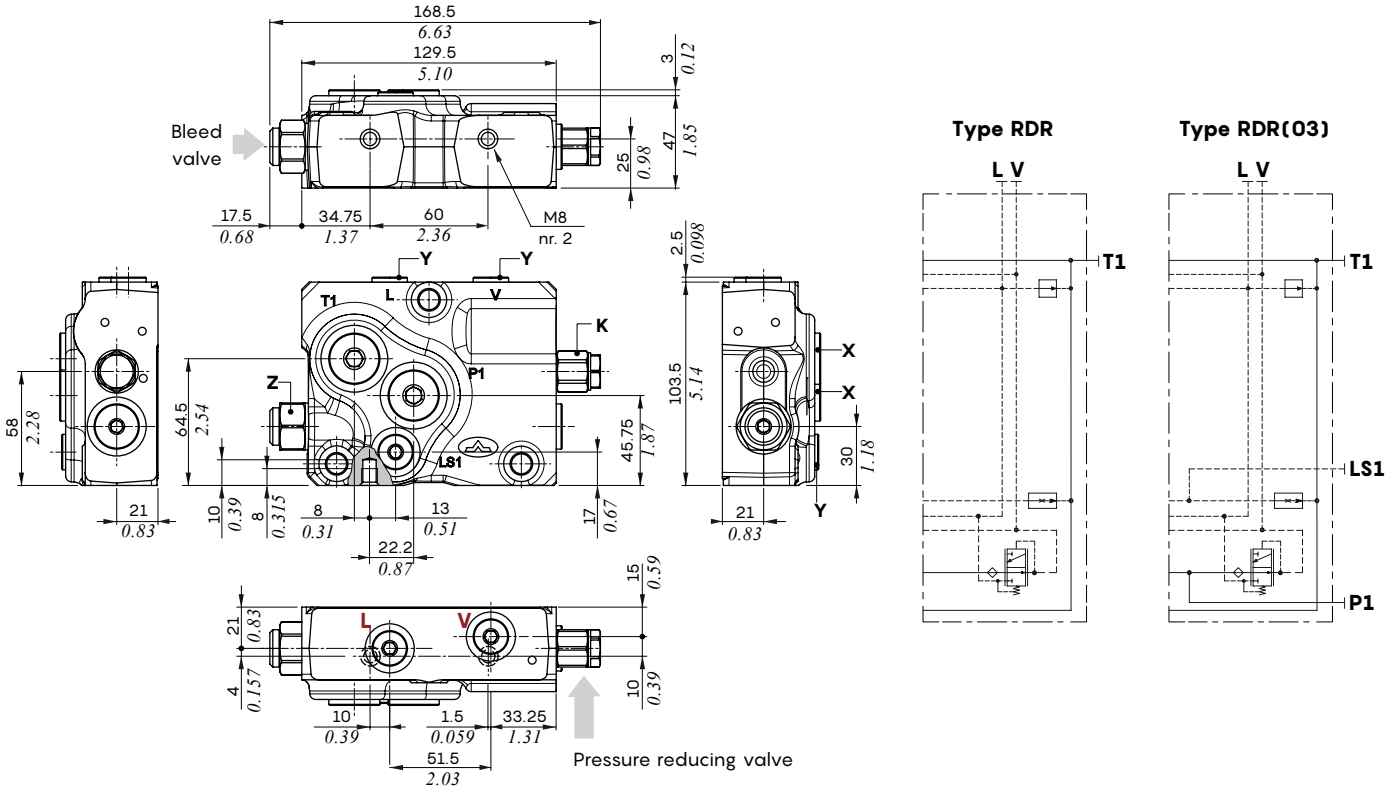

Bleed valve features

Max. inlet pressure .....: 380 bar *(5550 psi)*
Max. back pressure.....: 25 bar *(363 psi)*

Pressure reducing valve features

Max. inlet pressure .....: 380 bar *(5550 psi)*
Reduced pressure range....: 30-45 bar *(435-650 psi)*
Max. back pressure.....: 25 bar *(363 psi)*

Wrenches and tightening torques

K = wrench 19 - 24 Nm *(17.7 lbft)*
X = allen wrench 8 - 24 Nm *(17.7 lbft)*
Y = allen wrench 6 - 24 Nm *(17.7 lbft)*
Z = wrench 24 - 42 Nm *(31 lbft)*

Bleed valve diagram
Flow vs. Pressure

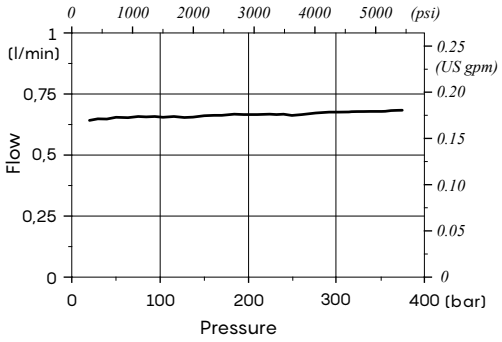

Pressure reducing valve diagram
Reduced pressure vs. Inlet pressure

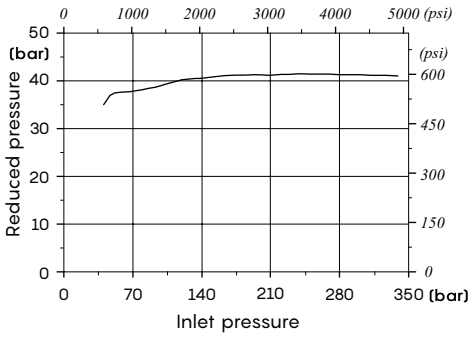

HF complete section ordering codes

A Mechanical and proportional hydraulic controls configuration:

Nr. of working sections

DPX100HF/2/AM1(TGW3-175\ELN)/Q-101(100\100)-8L/P-E101(100\100)-8IMN.U1(100)U2(100)/RF-SAE-12VDC

1A 1C 2A 2A 3 4 5

DPX100HF: valve with High Flow sections only
For working conditions and **HF** sections configuration guide see pages 5, 6, 52, 53

B Mechanical and proportional hydraulic controls in mixed configuration:

DPX100/3/AM1(TGW3-175\ELN)/HF-P-E101(100\100)-8IMN.U1(100)U2(100)/HP-P-101(80\80)-8L.U3T/

1A 1C 2A 2C

DPX100: mixed configuration valve with at least Standard Pressure working section
For working conditions and guide to mixed configuration, **Standard**, **High Pressure (HP)**, **High Flow (HF)** see pages 5, 6, 52, 53

Q-E102(80\80)-8IMN/RF-SAE-12VDC

2B 3 4 5

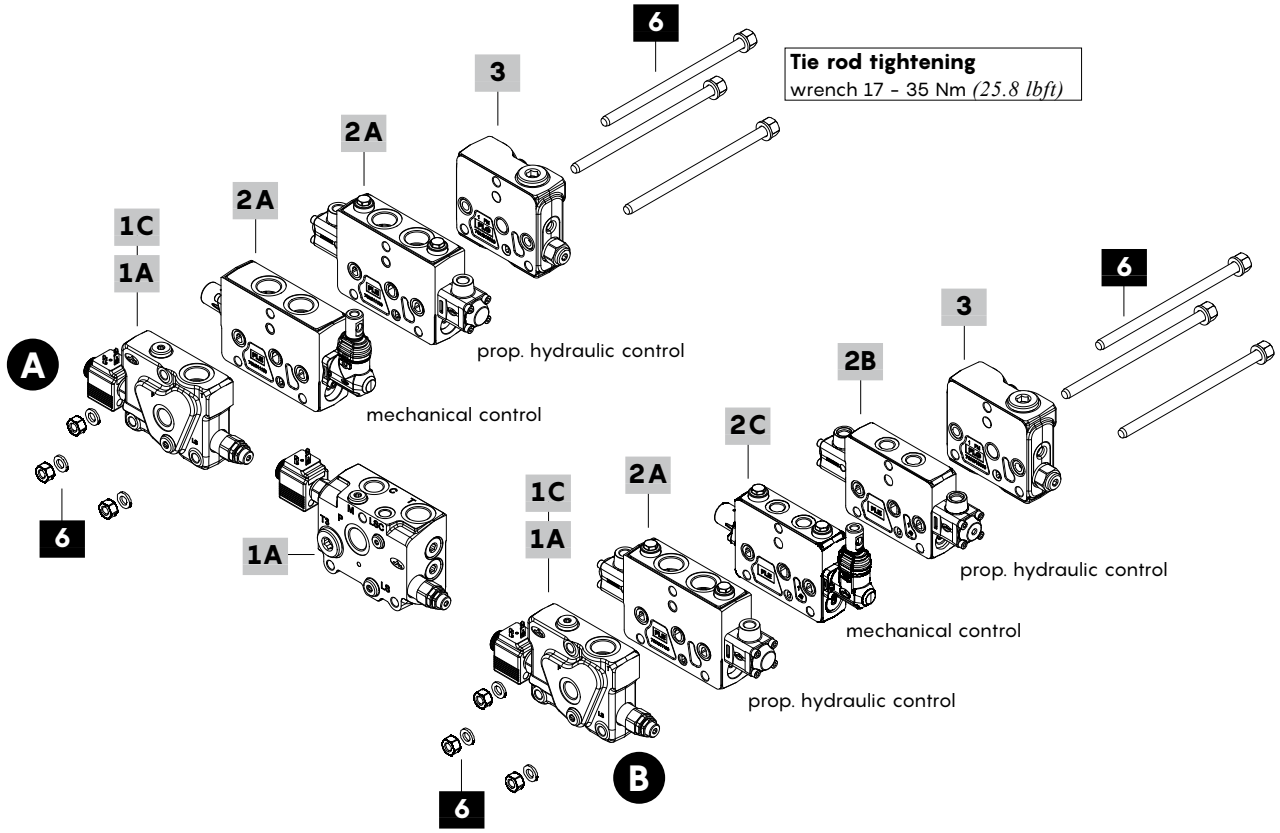

HF complete section ordering codes

A Electrohydraulic controls configuration:

Nr. of working sections

DPX100HF/2/AM1(TGW3-175\ELN)/PZ-E101(100\100)-8EZ3LQF3.U3T/QE-E101(100\100)-8EB3T/

1A 1C 2A 2A

DPX100HF: valve with High Flow sections only

For working conditions and **HF** sections configuration guide see pages 5, 6, 52, 53

RDR03-SAE-12VDC

3 4 5

B Electrohydraulic controls in mixed configuration:

DPX100/3/AM1(TGW3-175\ELN)/HF-QZ-E101(100\100)-8EZ3LQF3/HP-PZ-E101(80\80)-EZ3LQF3/

1A 1C 2A 2C

DPX100: mixed configuration valve with at least Standard Pressure working section

For working conditions and guide to mixed configuration, **Standard**, **High Pressure (HP)**, **High Flow (HF)** see pages 5, 6, 52, 53

QE-E102(80\80)-8EB3TF3/RDR03-SAE-12VDC

2B 3 4 5

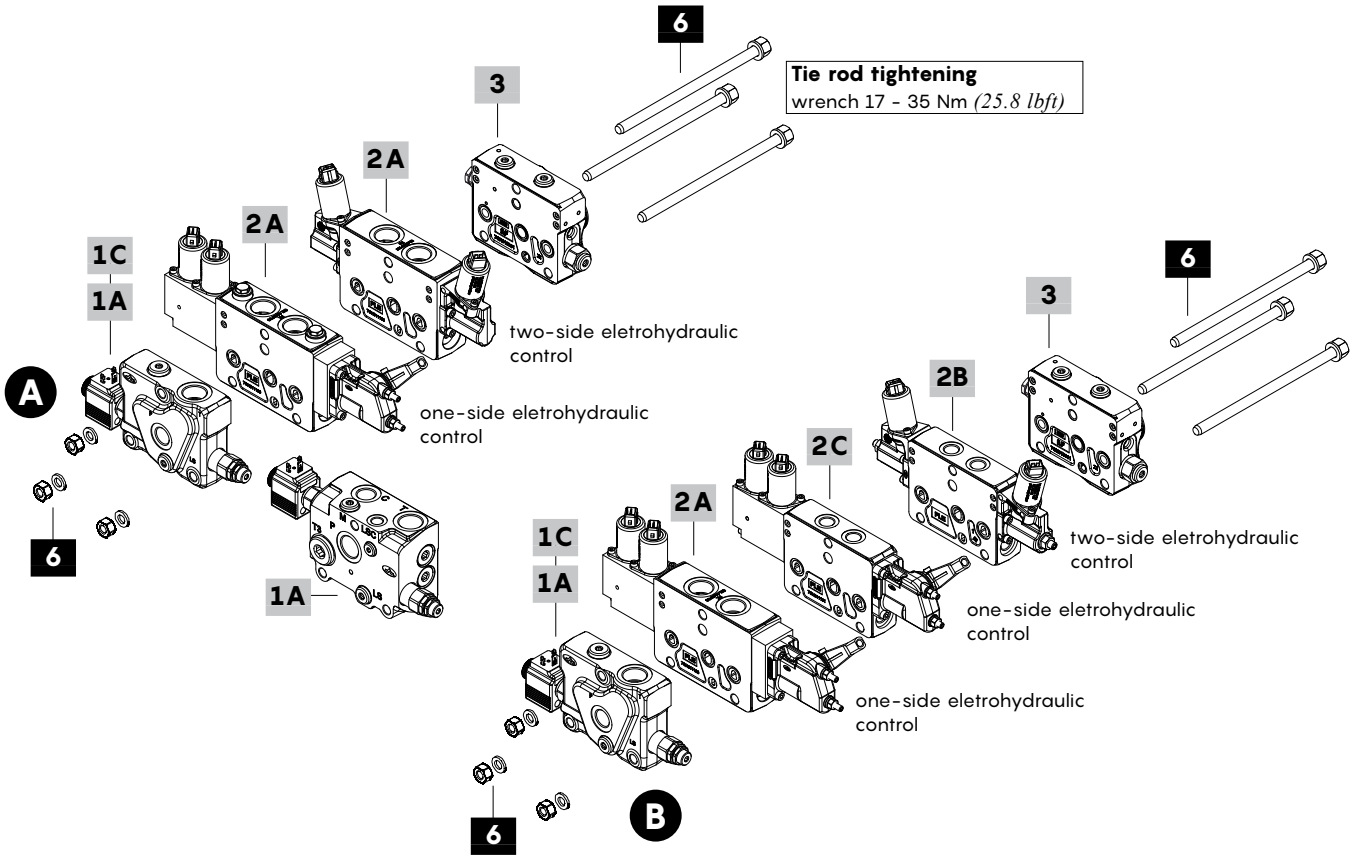

HF complete section ordering codes

1A Inlet section for High Flow configuration *

Open Center circuit
TYPE: **DPX100/AM1(TGW3-175\ELN)-SAE12-12VDC**
CODE: 640205030
DESCRIPTION: For Standard Pressure. With compensator, pressure relief valve and unloader valve, with P-T-LS ports (LS plugged), SAE12 P and T ports
Closed Center circuit
TYPE: **DPX100/AN1(TGW3-175\ELN)-SAE12-12VDC**
CODE: 640205032S
DESCRIPTION: For Standard Pressure. Without compensator, with press. relief valve and unloader valve, with P-T-LS ports, SAE12 P and T ports.

1C High Pressure inlet section *

Open Center circuit
TYPE: **DPX100HP/AM1(TGW5-350/ELN)-SAE12-12VDC**
CODE: 640205031S
DESCRIPTION: As previous one with SAE12 P and T ports
Closed Center circuit
Refer to "Std pressure" inlet sections

2A High Flow working section *

Mechanical control
TYPE: **DPX100HF/Q-101(120\120)-8L-SAE-FPM**
CODE: 640115022V
DESCRIPTION: Lever control without port valve arrangement
TYPE: **DPX100HF/P-101(120\120)-8L.U3T-SAE-FPM**
CODE: 640105032V
DESCRIPTION: As previous one with port valve arrangement
Proportional hydraulic control
TYPE: **DPX100HF/Q-E101(120\120)-8IMN-SAE-FPM**
CODE: 640115023V
DESCRIPTION: Without port valve arrangement
TYPE: **DPX100HF/P-E101(120\120)-8IMN.U3(100)-SAE**
CODE: 640105033S
DESCRIPTION: With antishock port valves
Two-side proportional electrohydraulic control
TYPE: **DPX100HF/QE-E101(120\120)-8EB3TF3-SAE-12VDC-FPM**
CODE: 640115024V
DESCRIPTION: With stroke limiter, without port valve arrangement
TYPE: **DPX100HF/PE-E101(120/120)-8EB3TF3.U3T-SAE-12VDC-FPM**
CODE: 640105034V
DESCRIZIONE: As previous one with port valve arrangement
One-side proportional electrohydraulic control
TYPE: **DPX100/QZ-E101(120\120)-8EZ34SLCQ-SAE-12VDC-FPM**
CODE: 640105048V
DESCRIPTION: With encap on B side, without port valve arrangement
TYPE: **DPX100HF/PZ-E101(120\120)-8EZ34LQF3.U3T-SAE-12VDC-FPM**
CODE: 640105047V
DESCRIPTION: With spool stroke limiter, with port valve arrangement

2B Standard Pressure working section *

Pressure Standard working sections can be assembled in all cataloue configurations: see page 57.

2C High Pressure working section *

High Pressure working sections can be assembled in all catalogue configurations: see page 57.

3 Outlet section *

The sections are the same for Standard and High Pressure configuration
For mechanical and proportional hydraulic configuration
TYPE: **DPX100/RF-SAE** CODE: 640305003S
DESCRIPTION: With bleed valve and upper T2 port (plugged)
For electrohydraulic or mixed configuration
TYPE: **DPX100/RDN-NOTAP(VL)-SAE** CODE: 640305002S
DESCRIPTION: Without pressure reducing valve, external pilot and drain (V-L ports), with Bleed valve and side T1 port (plugged).
TYPE: **DPX100/RDR-SAE** CODE: 640305006S
DESCRIPTION: With pressure reducing valve and Bleed valve, internal pilot and drain (V-L plugged ports), and side T1 port (plugged)
TYPE: **DPX100/RDR(03)-SAE**
CODE: 640305007S
DESCRIPTION: With pressure reducing valve and Bleed valve, internal pilot and drain (V-L plugged ports), side T1-P1-LS1 ports (plugged), P1 and T1 ports
Note: for sections with different port arrangement please contact Sales Dpt.

4 Valve threading

Only specify if it is different from **BSP** standard (see page 7).

5 Voltage

Specify the voltage of electric devices.

6 Assembling kit for HF configurations

Assembling kits for valve with M and N inlet sections

CODE	DESCRIPTION
5TIR110152	Valve with 1 HF section
5TIR110195	Valve with 2 HF sections
5TIR110238	Valve with 3 HF sections
5TIR110280	Valve with 4 HF sections
5TIR110180	Valve with 1 HF section + 2 Standard or HP sections
5TIR110225	Valve with 1 HF section + 2 Standard or HP sections
5TIR110331	Valve with 1 HF section + 5 Standard or HP sections
5TIR110337	Valve with 2 HF sections + 4 Standard or HP sections
5TIR110366	Valve with 1 HF section + 6 Standard or HP sections
5TIR110403	Valve with 1 HF section + 7 Standard or HP sections
5TIR110440	Valve with 1 HF section + 8 Standard or HP sections
5TIR110475	Valve with 1 HF section + 9 Standard or HP sections

NOTE: For not listed assembling kits (eg valve with PFS inlet section) contact Sales Department

NOTE (*): Codes are referred to **UN-UNF** thread.

HF working section part ordering codes (mechanical and hydraulic)

A Mechanical control configuration:

flow on A/B ports (l/min) — Valve setting (bar): A port, B port

DPX100HF / P - 101(80\80) - 8 L . U1(100) U2(120) - SAE

1 2 3 4 6 7

High Flow working section

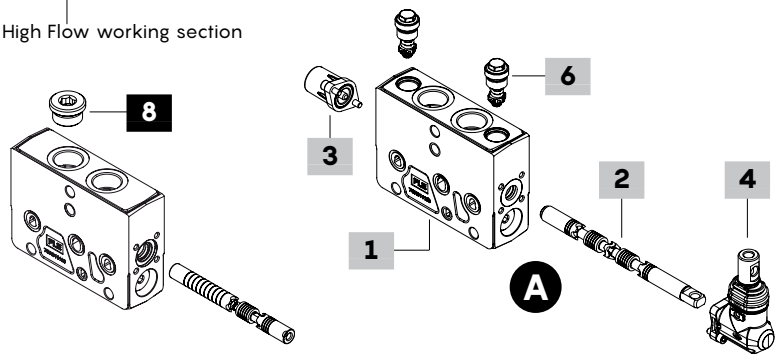

B Prop. hydraulic control configuration:

DPX100HF / Q - E101(120\120) - 8IMN - SAE

1 2 5 7

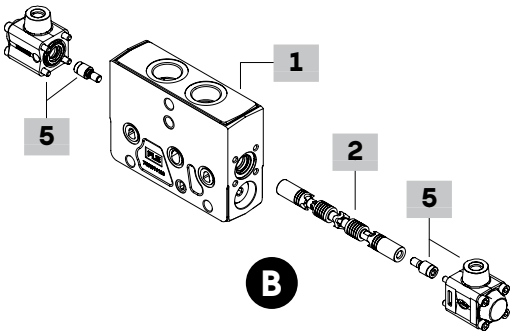

1 High Flow working section * page 104

For mechanical control

TYPE: **DPX100HF/Q-SAE12-FPM** CODE: 5EL1045F10V
DESCRIPTION: Without port valve arrangement
TYPE: **DPX100HF/P-SAE12-FPM** CODE: 5EL1045F00V
DESCRIPTION: With port valve arrangement

For proportional hydraulic control

TYPE: **DPX100HF/Q-IM-SAE12-FPM** CODE: 5EL1045F10AV
DESCRIPTION: With port valve arrangement
TYPE: **DPX100HF/P-IM-SAE12-FPM** CODE: 5EL1045F00AV
DESCRIPTION: With port valve arrangement

2 Spool for HF section page 105

Flow is referred to 14 bar *(200 psi)* stand-by (margin pressure)

TYPE	CODE	DESCRIPTION
For mechanical control		
Double acting with A and B closed in neutral position		
101(120)	3CU7110F01	120 l/min *(32 US gpm)* flow
103(100)	3CU7110F03	100 l/min *(26 US gpm)* flow
104(80)	3CU7110F04	80 l/min *(21 US gpm)* flow
102(60)	3CU7110F02	60 l/min *(16 US gpm)* flow
Double acting with A and B to tank in neutral position		
201(120)	3CU7125F01	120 l/min *(32 US gpm)* flow
Double acting with A and B partially to tank in neutral position		
2H11(100)	3CU7124F11	100 l/min *(26 US gpm)* flow
2H06(60)	3CU7124F06	60 l/min *(16 US gpm)* flow
For proportional hydraulic control		
Double acting with A and B closed in neutral position		
E101(120)	3CU7710F01	120 l/min *(32 US gpm)* flow
E106(100)	3CU7710F06	100 l/min *(26 US gpm)* flow
E103(80)	3CU7710F03	80 l/min *(21 US gpm)* flow
E105(60)	3CU7710F05	60 l/min *(16 US gpm)* flow
E104(40)	3CU7710F04	40 l/min *(10.5 US gpm)* flow
Double acting with A and B to tank in neutral position		
E201(80)	3CU7725F01	Portata fino a 80 l/min
Double acting with A and B partially to tank in neutral position		
E2H01(120)	3CU7724F01	120 l/min *(32 US gpm)* flow
E2H04(110)	3CU7724F04	110 l/min *(29 US gpm)* flow
E2H03(100)	3CU7724F03	100 l/min *(26 US gpm)* flow
E2H02 (60)	3CU7724F02	60 l/min *(16 US gpm)* flow
Double acting with A and B to tank in neutral position		
E201(80)	3CU7725F01	80 l/min *(21 US gpm)* flow
Single acting on A or B, other port plugged: SAE12 plug is required		
E301-E401(120)	3CU7731F01	120 l/min *(32 US gpm)* flow

8 Plug for single acting spool *

CODE	DESCRIPTION
3XTAP832200	SAE12 plug

NOTE (*): Codes are referred to **UN-UNF** thread.

3 "A" side spool positioners page 75

Controls for HF sections are the same as for Standard Pressure sections

TYPE	CODE	DESCRIPTION
7FT	5V07407000	With friction and neutral pos. notch
7FTN	5V07407010	As 7FT, friction regulation with spring
8	5V08107000	3 pos., spring return to neutral pos.
8F2	5V08107100	Spool stroke limiter on B port
8D	5V08107200	External pin with M6 female thread
8TL	5V08107310	Arrangement for double control
8RM2-12VDC	5V08107590	Electromagnetic detent in pos.2
8MG3(NO)	5V08107660	With micro in postions 1 and 2
8PP	5V08107700	Proportional pneumatic control
8PNB	5V08107718	On/off waterproof pneumatic control
8EPNB3-12VDC	5V08107742	On/off electropneumatic control
8EPNB3-24VDC	5V08107743	As previous one
8K-12DC	5V08707212	Solenoid detent in neutral position
8K-24DC	5V08707224	As previous one
9B	5V09207000	Detent in position 1
10B	5V10207000	Detent in position 2
11B	5V11207000	Detent in positions 1 and 2

4 "B" side spool control kit page 80

Controls for HF sections are the same as for Standard Pressure sections

TYPE	CODE	DESCRIPTION
L	5LEV107000	Standard lever box
LSG	5LEV107000S	As previous one, water-proof type
LF1	5LEV107100	As L type, spool stroke limiter on A port
LSGF1	5LEV107100S	As previous one, water-proof type
SLC	5COP207000	Without lever with endcap
SLP	5COP107010	Without lever with dust-proof plate

5 Proportional hydraulic control * page 82

Controls for HF sections are the same as for Standard Pressure sections

TYPE	CODE	DESCRIPTION
8IMN-SAE	5IDR204702V	Range 8-27 bar *(116-392 psi)*
8IMF3N-SAE	5IDR204710V	As previous one with spool stroke limiter
8IMXN-SAE	5IDR204701V	Range 7.5-24 bar *(109-348 psi)*
8IMXF3N-SAE	5IDR204713V	As previous one with spool stroke limiter

6 Port valves page 94

For complete valves list see page 65

TYPE	CODE	DESCRIPTION
U025	5KIT330025	Setting: 25 bar *(360 psi)*

7 Section threading

Only specify if it is different from **BSP** standard (see page 7).

HF working section part ordering codes (electrohydraulic)

A One-side electrohydraulic control configuration:

flow on A/B ports (l/min)

DPX100HF / QZ - E101(120\120) - 8EZ3 LQ - SAE - 12VDC

1 2 3 4 8 3

High Flow working section

B One-side complete electrohydraulic control configuration:

Valve setting (bar)
A port B port

DPX100HF / PZ - E101(120\120) - 8EZ3SLCQ . U1(100) U2(120) - SAE - 12VDC

1 2 5 7 8 5

C Two-side electrohydraulic control configuration:

DPX100HF / QE - E101(120\120) - 8EB3TF3 - SAE - 12VDC

1 2 6 8 6

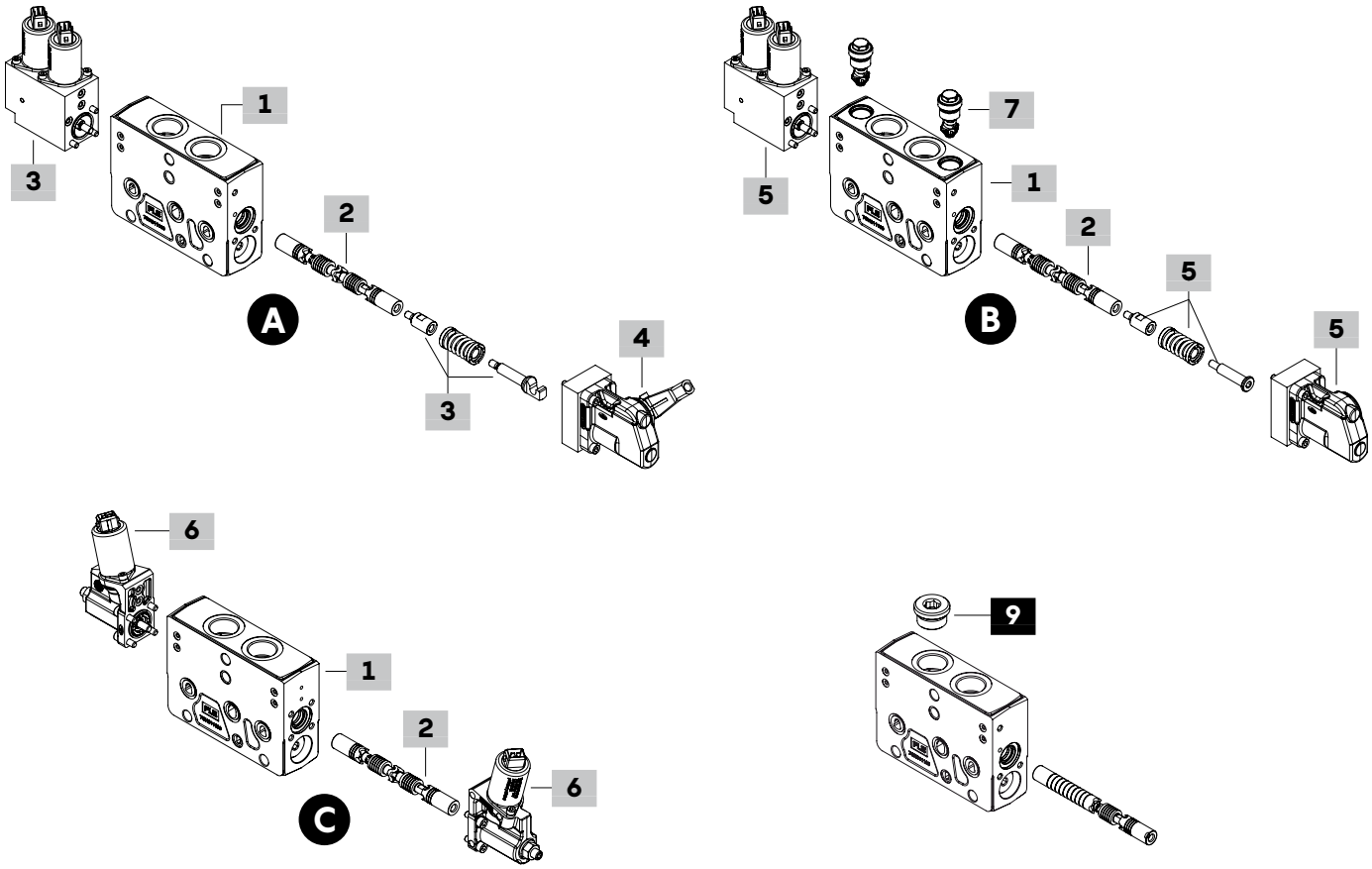

HF working section part ordering codes (electrohydraulic)

1 High Flow working section * page 104

For two-side electrohydraulic control

TYPE: **DPX100HF/QE-SAE12-FPM** CODE: 5EL1045F11V
DESCRIPTION: Without port valve arrangement
TYPE: **DPX100HF/PE-SAE12-FPM** CODE: 5EL1045F02V
DESCRIPTION: With port valve arrangement

For one-side electrohydraulic control

TYPE: **DPX100HF/QZ-SAE12-FPM** CODE: 5EL1047F21V
DESCRIPTION: Without port valve arrangement
TYPE: **DPX100HF/PZ-SAE12-FPM** CODE: 5EL1047F00V
DESCRIPTION: With port valve arrangement

2 Spool page 105

Flow is referred to 14 bar *(200 psi)* stand-by (margin pressure)

TYPE	CODE	DESCRIPTION
Double acting with A and B closed in neutral position		
E101(120)	3CU7710F01	120 l/min *(32 US gpm)* flow
E106(100)	3CU7710F06	100 l/min *(26 US gpm)* flow
E103(80)	3CU7710F03	80 l/min *(21 US gpm)* flow
E105(60)	3CU7710F05	60 l/min *(16 US gpm)* flow
E104(40)	3CU7710F04	40 l/min *(10.5 US gpm)* flow
Double acting with A and B to tank in neutral position		
E201(80)	3CU7725F01	80 l/min *(21 US gpm)* flow
Double acting with A and B partially to tank in neutral position		
E2H01(120)	3CU7724F01	120 l/min *(32 US gpm)* flow
E2H04(110)	3CU7724F04	110 l/min *(29 US gpm)* flow
E2H03(100)	3CU7724F03	100 l/min *(26 US gpm)* flow
E2H02 (60)	3CU7724F02	60 l/min *(16 US gpm)* flow
Single acting on A or B, other port plugged: SAE12 plug is required		
E301-E401(120)	3CU7731F01	120 l/min *(32 US gpm)* flow

3 One-side electrohydr.control; "A" side page 107

These controls must be coupled with "B" side options

TYPE	CODE	DESCRIPTION
8EZ3-12VDC	5IDR604314V	With AMP connector
8EZ3-24VDC	5IDR604313V	As previous one
8EZ34-12VDC	5IDR604315V	With Deutsch connector
8EZ34-24VDC	5IDR604316V	As previous one
With spool position sensor		
8EZ3SPSD-12VDC	5IDR604317V	AMP conn. and digital sensor
8EZ3SPSD-24VDC	5IDR604318V	As previous one
8EZ34SPSD-12VDC	5IDR604319V	Deutsch conn. and digital sensor
8EZ34SPSD-24VDC	5IDR604320V	As previous one
8EZ34SPSL-0.5(A)-4.5(B)-12VDC	5IDR604321V	AMP conn. and analog sensor

4 One-side electrohydr.control; "B" side page 108

These options must be coupled with "A" side controls

TYPE	CODE	DESCRIPTION
LQ	5LEV100705AV	Lever box
LQF3	5LEV100706AV	Lever box with spool stroke limiter
LQSL	5COP204101AV	Lever box without lever

5 One-side complete electrohydr.control page 109

Controls already comprehensive of endcap on B side

TYPE	CODE	DESCRIPTION
8EZ3SLCQ-12VDC	5IDR604314SV	With AMP connector
8EZ3SLCQ-24VDC	5IDR604313SV	As previous one
8EZ34SLCQ-12VDC	5IDR604315SV	With Deutsch connector
8EZ34SLCQ-24VDC	5IDR604316SV	As previous one

With spool position sensor

TYPE: **8EZ3SPSDSLCA-12VDC** CODE: 5IDR604317SV
DESCRIPTION: AMP connector and digital sensor
TYPE: **8EZ3SPSDSLCA-24VDC** CODE: 5IDR604318SV
DESCRIPTION: As previous one
TYPE: **8EZ34SPSDSLCA-12VDC** CODE: 5IDR604319SV
DESCRIPTION: Deutsch connector and digital sensor
TYPE: **8EZ34SPSDSLCA-24VDC** CODE: 5IDR604320SV
DESCRIPTION: As previous one
TYPE: **8EZ34SPSL-0.5(A)-4.5(B)SLCQ-12VDC** CODE: 5IDR604321SV
DESCRIPTION: AMP connector and analog sensor

6 Two-side electrohydr. control page 88

Controls for HF sections are the same as for Standard Pressure sections

TYPE	CODE	DESCRIPTION
Without lever control		
8EB3T-12VDC	5IDR904214V	With AMP connector
8EB3T-24VDC	5IDR904222V	As previous one
8EB34T-12VDC	5IDR904236V	With Deutsch connector
8EB34T-24VDC	5IDR904237V	As previous one
8EB3TF3-12VDC	5IDR904217V	With AMP, spool stroke limiter
8EB3TF3-24VDC	5IDR904224V	As previous one
8EB34TF3-12VDC	5IDR904235V	Deutsch conn.and stroke limiter
8EB34TF3-24VDC	5IDR904238V	As previous one
Without lever control, with spool position sensor		
8EB34TSPSL-0.5(A)-4.5(B)-12VDC	5IDR904268V	Deutsch conn. and analog sensor
8EB3TSPSD-12VDC	5IDR904233V	AMP conn. and digital sensor
8EB3TSPSD-24VDC	5IDR904226V	As previous one
With lever control		
8EB3TLH-12VDC	5IDR904215AV	With AMP connector
8EB3TLH-24VDC	5IDR904228AV	As previous one
8EB34TLH-12VDC	5IDR904219AV	With Deutsch connector
8EB34TLH-24VDC	5IDR904239AV	As previous one
8EB3TLHF3-12VDC	5IDR904311V	AMP conn. and stroke limiter
8EB3TLHF3-24VDC	5IDR904308AV	As previous one
8EB34TLHF3-12VDC	5IDR904240V	Deutsch conn. and stroke limiter
8EB34TLHF3-24VDC	5IDR904241AV	As previous one
With lever control and spool position sensor		
8EB3TLHSPSD-12VDC	5IDR904234AV	AMP connector and digital sensor
8EB3TLHSPSD-24VDC	5IDR904232AV	As previous one
8EB3TLHF3SPSL-0.5(A)-4.5(B)-12VDC	5IDR904259AV	AMP connector and analog sensor with spool stroke limiter
8EB3TLHF3SPSL-0.5(A)-4.5(B)-24VDC	5IDR904247V	As previous one

7 Port valves page 94

For complete valves list see page 65

TYPE	CODE	DESCRIPTION
U025	5KIT330025	Setting: 25 bar *(360 psi)*

8 Section threading

Only specify if it is different from **BSP** standard (see page 7)

9 Plug for single acting spool *

CODE	DESCRIPTION
3XTAP832200	SAE12 plug

NOTE (*): Codes are referred to **UN-UNF** thread.

HF working section

Dimensions and hydraulic circuit

Section for mechanical and proportional hydraulic controls

Type Q
(SAE12 ports)

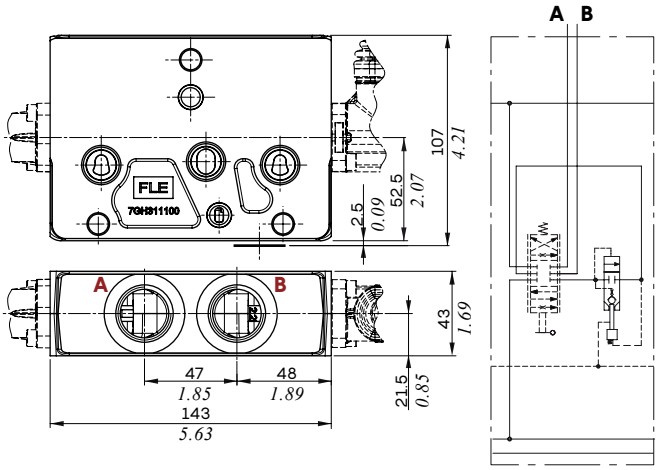

Type P
(SAE12 ports)

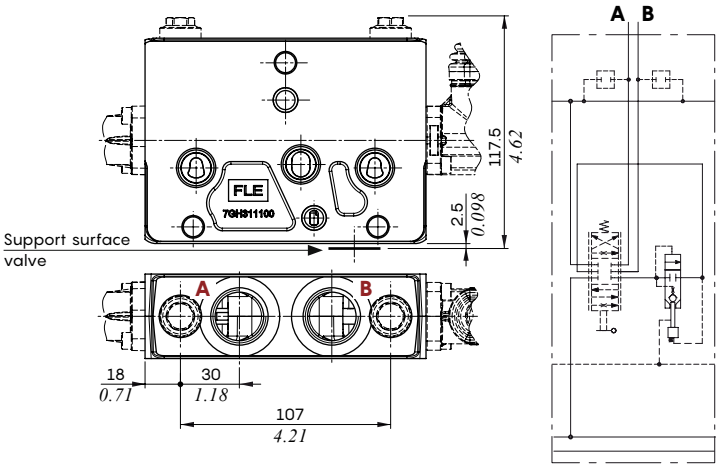

Section for electrohydraulic control

Type QE or PE

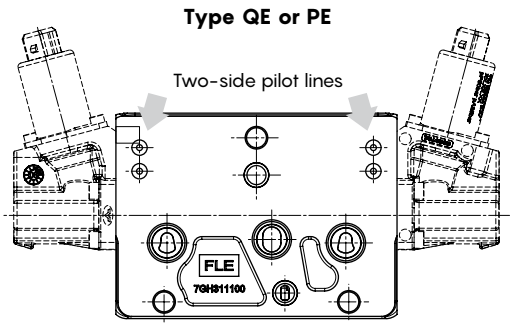

Type QZ or PZ

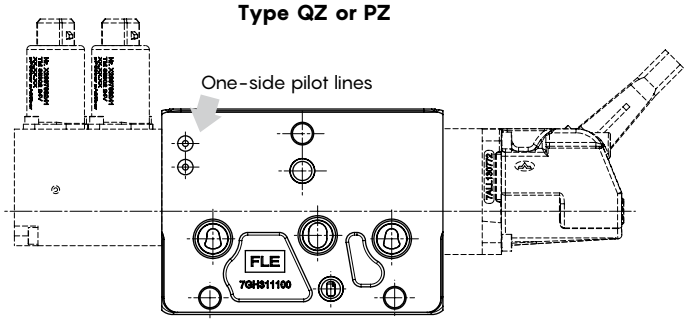

Type QE

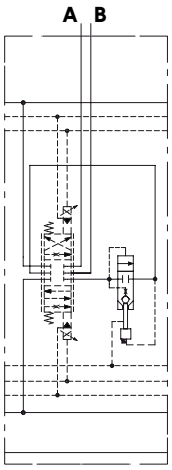

Type PE

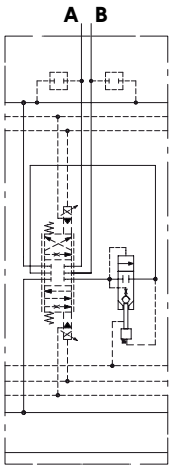

Type QZ

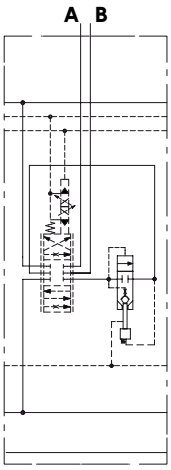

Type PZ

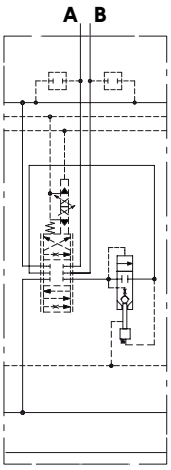

Spool

Type 1 (1../E1..)
A, B closed in neutral position

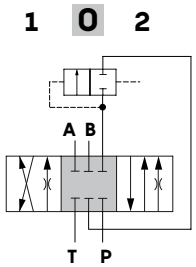

Stroke
position 1: + 6.5 mm *(+ 0.26 in)*
position 2: - 6.5 mm *(- 0.26 in)*

Type 2(2../E2..)
A, B to tank in neutral position

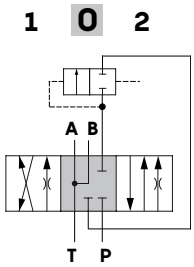

Stroke
position 1: + 6.5 mm *(+ 0.26 in)*
position 2: - 6.5 mm *(- 0.26 in)*

Type 2H(2H../E2H..)
A, B partially to tank in neutral pos.

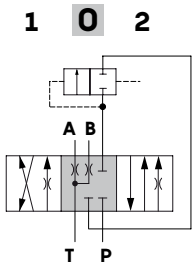

Stroke
position 1: + 6.5 mm *(+ 0.26 in)*
position 2: - 6.5 mm *(- 0.26 in)*

Type 3 (3../E3..)
Single acting on A

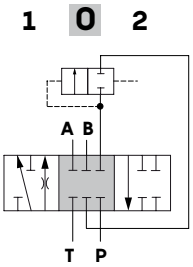

Stroke
position 1: + 6.5 mm *(+ 0.26 in)*
position 2: - 6.5 mm *(- 0.26 in)*

Type 4 (4../E4..)
Single acting on B

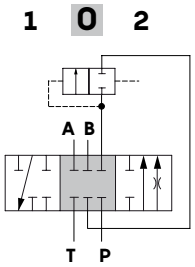

Stroke
position 1: + 6.5 mm *(+ 0.26 in)*
position 2: - 6.5 mm *(- 0.26 in)*

In case of replacement of the spool, the code stamping must be oriented toward B port.

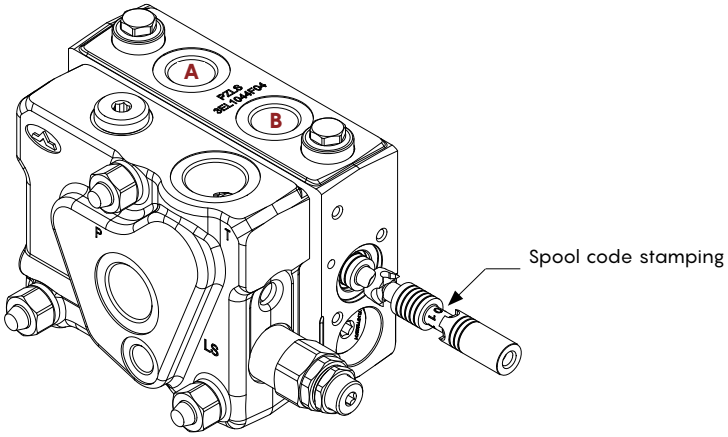

HF working section

Spool

Following curves are detected with standard spools, connecting P⇒A⇒B⇒T and P⇒B⇒A⇒T ports without flow multiplication. Customized spools with backpressure or flow multiplication may require different force, pressure and pilot current for operation.

Spool flow vs. Stand-by pressure (margin pressure)

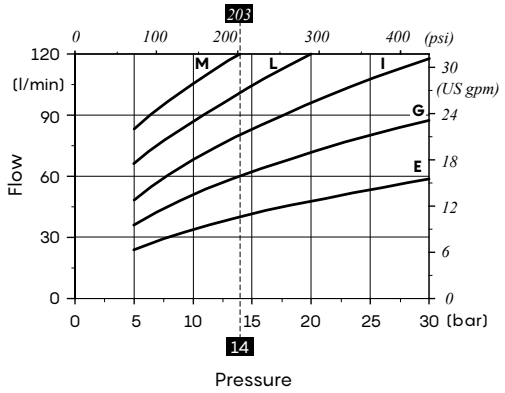

Curves with spool nominal flow @ 14 bar *(200 psi)* **stand-by (margin pressure)**
E = 40 l/min *(10.6 US gpm)* ± 10%
G = 60 l/min *(16 US gpm)* ± 10%
I = 80 l/min *(21 US gpm)* ± 10%
L = 100 l/min *(26 US gpm)* ± 10%
M = 120 l/min *(32 US gpm)* ± 10%

3 positions spool metering curve
Qin = 120 l/min *(32 US gpm)* - Open center circuit

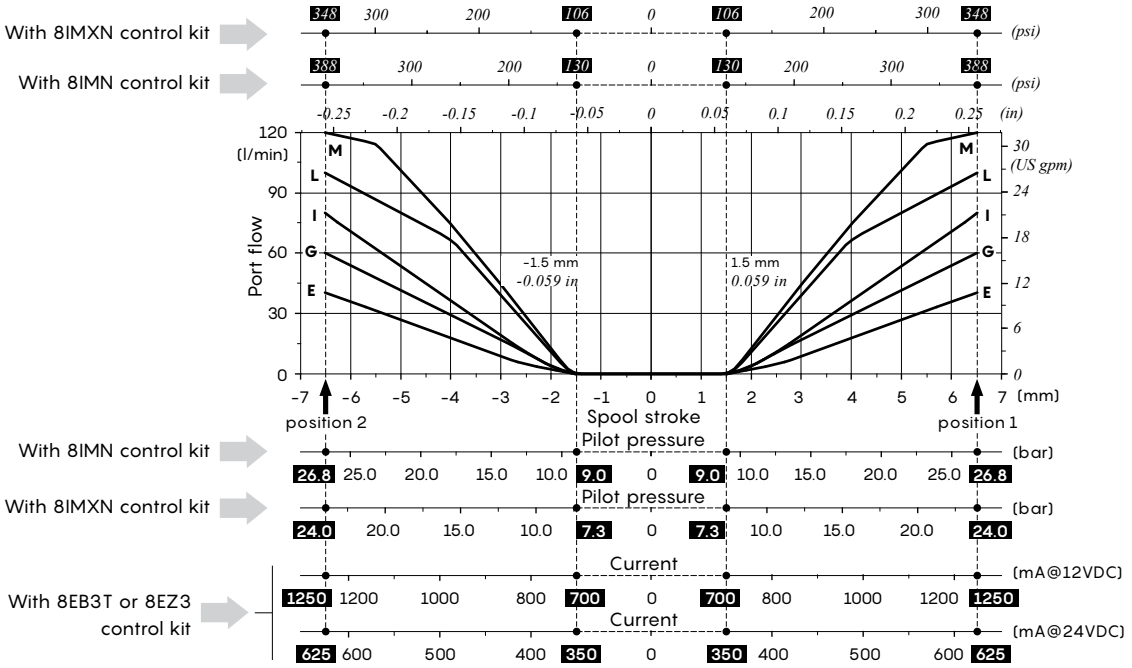

One-side electrohydraulic control: "A" side

The technical features are the same as the one-side electrohydraulic control for the standard section: see page 85

Control types

❶: With AMP JPT connector - AMP JPT mating connector, code: 5CON003

❷: With Deutsch DT04 connector - Deutsch DT06-2S mating connector code: 5CON140031

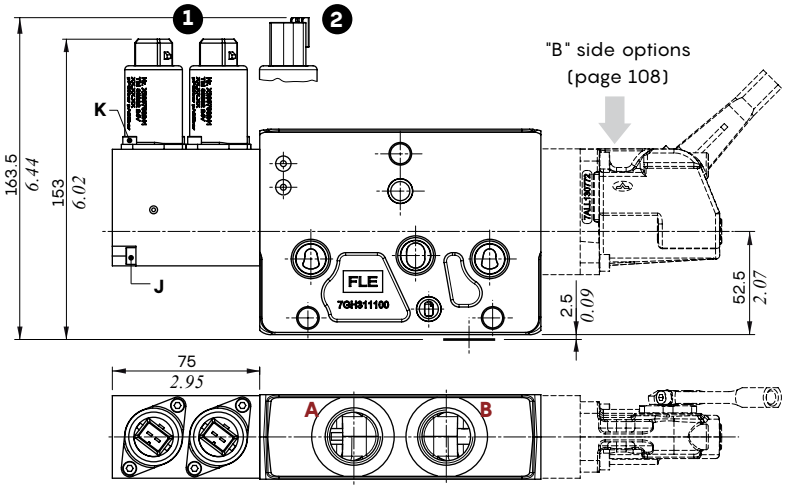

Types 8EZ3 - 8EZ34

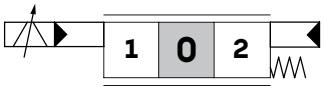

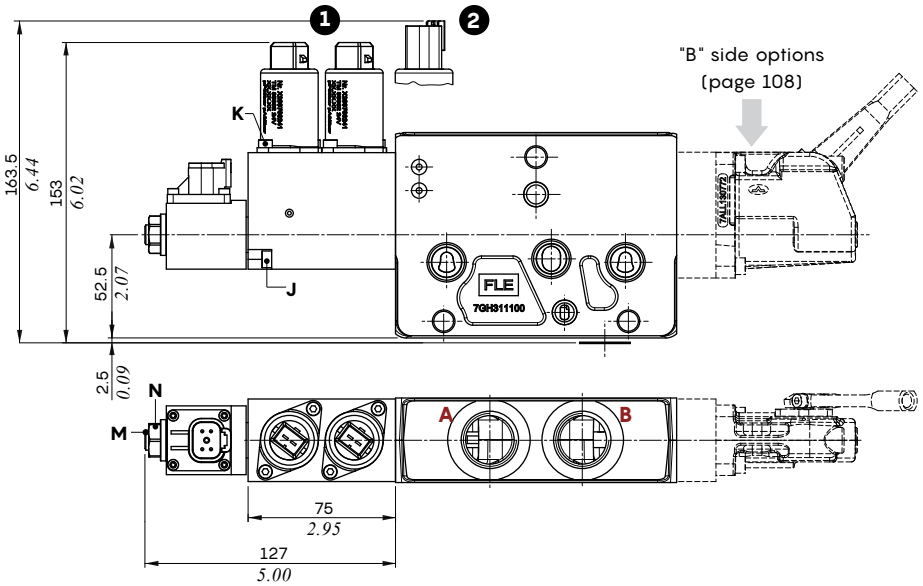

Types 8EZ3SPSD - 8EZ34SPSD

Digital output sensor SPSD

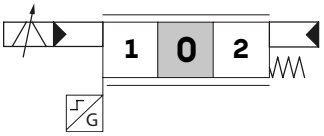

Type 8EZ34SPSL

Analog output sensor SPSL

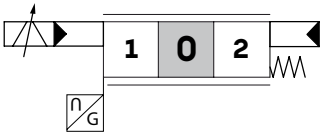

Wrenches and tightening torques

J = allen wrench 4 - 6.6 Nm *(4.9 lbft)*
K = allen wrench 3 - 5 Nm *(3.7 lbft)*
M = allen wrench 4 - 9.8 Nm *(7.2 lbft)*
N = wrench 17 - 9.8 Nm *(7.2 lbft)*

HF working section

One-side electrohydraulic control: "B" side option

These options are available for one-side electyrohydraulic controls only.

Type LQ
Lever box

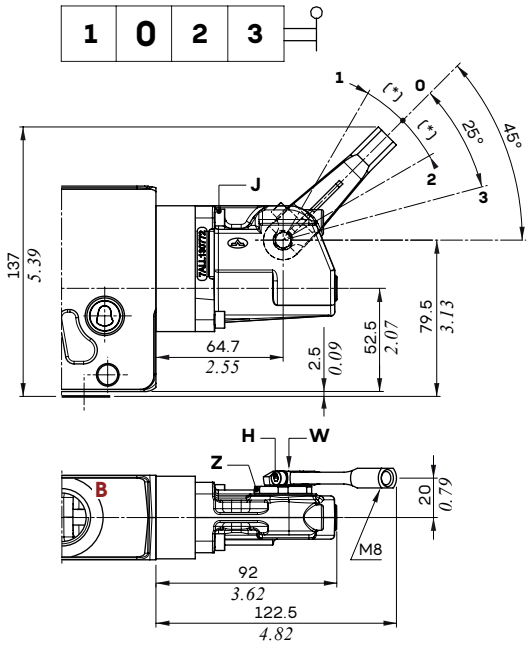

Type LQF3
Spool stroke limiter
on A and B ports

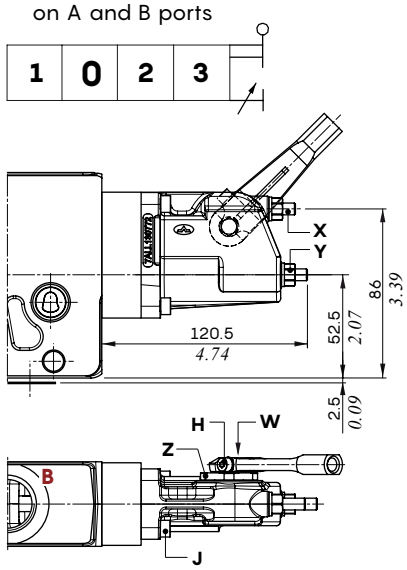

Angle (*)
15° with 8EZ3.. type controls
14° with 13EZ3.. type controls

Type LQSL
Lever box, without lever

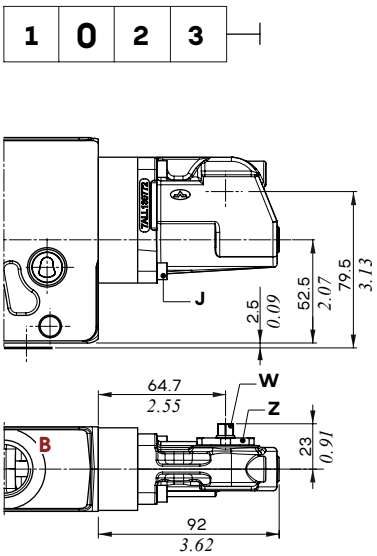

Wrenches and tightening torques

H = allen wrench 3 - 6.6 Nm *(4.9 lbft)*
J = allen wrench 4 - 6.6 Nm *(4.9 lbft)*
X = allen wrench 3
Y = wrench 10 - 9.8 Nm *(7.2 lbft)*
Z = wrench 29 - 24 Nm *(17.7 lbft)*
W = wrench 8

Complete one-side electrohydraulic control

Controls already comprehensive of endcap on B side.

Control types

❶: With AMP JPT connector - AMP JPT mating connector, code: 5CON003

❷: With Deutsch DT04 connector - Deutsch DT06-2S mating connector code: 5CON140031

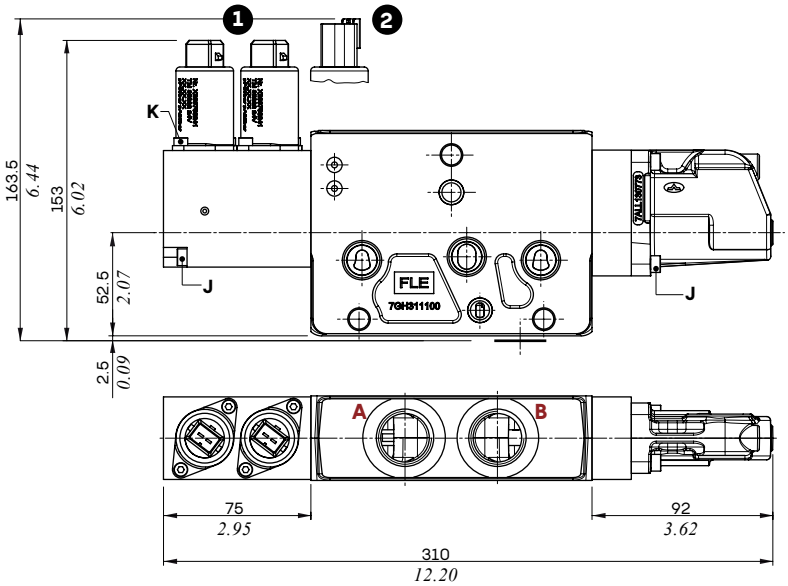

Types
8EZ3SLCQ - 8EZ34SLCQ
Without lever control

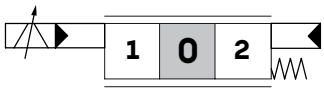

Wrenches and tightening torques

J = allen wrench 4 - 6.6 Nm *(4.9 lbft)*
K = allen wrench 3 - 5 Nm *(3.7 lbft)*
M = allen wrench 4 - 9.8 Nm *(7.2 lbf)*
N = wrench 17 - 9.8 Nm *(7.2 lbf)*

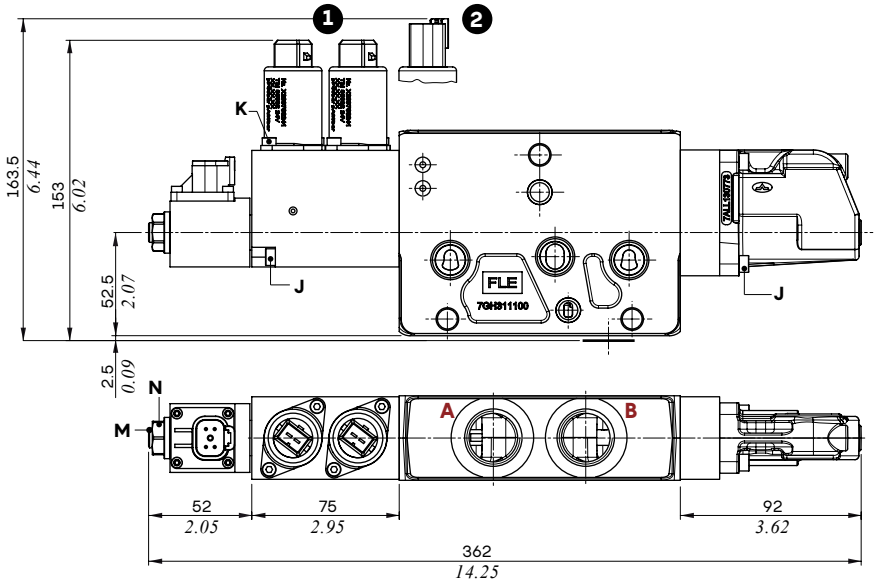

Types
8EZ3SPSDSLCA - 8EZ34SPSDSLCA
Digital output sensor SPSD

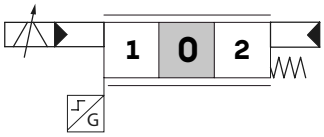

Type 8EZ34SPSLSLCQ
Analog output sensor SPSL

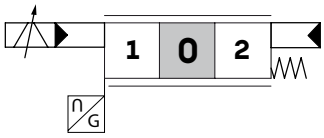

LL configuration complete section ordering codes

A Proportional hydraulic controls configuration:

Nr. of working sections

DPX100/4/AM1(TGW3-175\ELN)/ HF-P-ED-E101(120\120)-8IMN.U3T/PLL-ED-E101LL(80\80)-8IMN.U3T/

1 2D 2A

DPX100: valve with Standard pressure configuration

For working conditions and guide to mixed configuration, **Low Leak** sections with **HF, Standard** or **HP** sections see pages 5, 6, 51 to 55.

PLL-ED-E101LL(80\80)-8IMN.U1(100)U2(100)/Q-ED-E101(80\80)-8IMN/RF-SAE-12VDC

2A 2B 2C 3 4 5

B Electrohydraulic controls configuration:

DPX100/3/AM1(TGW3-175\ELN)/PZLL-ED-E101LL(80\80)-8EZ3LQ.U3T/PZ-ED-E101(80\80)-8EZ3LQ.U1(100)U2(100)/

1 2A 2B 2C

DPX100: valve with Standard pressure configuration

For working conditions and guide to mixed configuration, **Low Leak** sections with **HF, Standard** or **HP** sections see pages 5, 6, 51 to 55

QE-ED-E101(80\80)-8EB3TLH/RDR(03)-SAE-12VDC

2B 2C 3 4 5

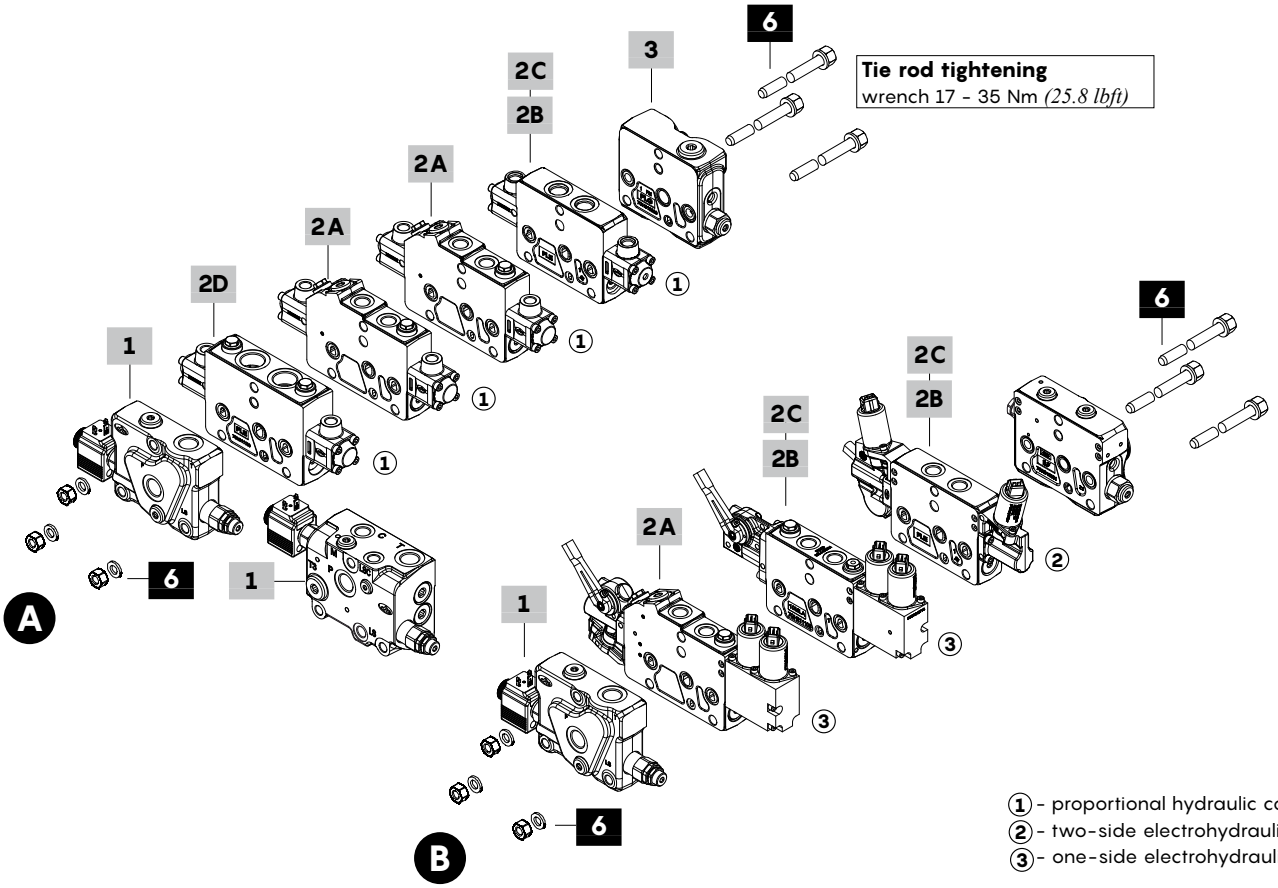

① - proportional hydraulic control
② - two-side electrohydraulic control
③ - one-side electrohydraulic control

LL configuration complete section ordering codes

1 Std pressure inlet section *

The sections listed are by way of example; the compolete list of available inlet sections is on page 54.

Open Center circuit
TYPE: **DPX100/AM1(TGW3-175\ELN)-SAE-12VDC**
CODE: 640205016S
DESCRIPTION: With compensator, press. relief valve and unloader valve, with P-T-LS ports (LS plugged)

Closed Center circuit
TYPE: **DPX100/AN1(TGW3-175\ELN)-SAE-12VDC**
CODE: 640205021S
DESCRIPTION: Without compensator, with pressure relief valve and unloader valve, with P-T-LS ports

2A Low Leak Std pressure working section *

Codes are referred to Right Inlet working sections

Proportional hydraulic control
TYPE: **DPX100/QLL-ED-E101(80\80)-8IMN-SAE**
CODE: 640100015S
DESCRIPTION: Without port valves arrangement
TYPE: **DPX100/PLL-ED-E101(80\80)-8IMN.U3(100)-SAE**
CODE: 640100016S
DESCRIPTION: With antishock valves

One-side proportional electrohydraulic control
TYPE: **DPX100/QZLL-ED-E101(80\80)-8EZ3LQF3-SAE-12VDC**
CODE: 640100017S
DESCRIPTION: With spool stroke limiter, without port valves arrangement
TYPE: **DPX100/PZLL-ED-E101(80\80)-8EZ3LQF3.U3T-SAE-12VDC**
CODE: 640100018S
DESCRIPTION: As previous one with port valves arrangement
TYPE: **DPX100/PZLL-ED-E101(80\80)-8EZ3LQF3.U3(100)-SAE-12VDC**
CODE: 640100019S
DESCRIPTION: As previous one, with antishock valves

2B Std pressure working section *

Codes are referred to Right Inlet working sections

Proportional hydraulic control
TYPE: **DPX100/Q-ED-E101(80\80)-8IMN-SAE**
CODE: 640100020S
DESCRIPTION: Without port valves arrangement
TYPE: **DPX100/P-ED-E101(80\80)-8IMN.U3(100)-SAE**
CODE: 640100021S
DESCRIPTION: With antishock valves

Two-side proportional electrohydraulic control
TYPE: **DPX100/QE-ED-E101(80\80)-8EB3TF3-SAE-12VDC**
CODE: 640100022S
DESCRIPTION: With spool stroke limiter, without port valve arrangement
TYPE: **DPX100/PE-ED-E101(80\80)-8EB3TF3.U3T-SAE-12VDC**
CODE: 640100023S
DESCRIPTION: As previous one with port valves arrangement
TYPE: **DPX100/PE-ED-E101(80\80)-8EB3TLH.U3T-SAE-12VDC**
CODE: 640100024S
DESCRIPTION: With lever control and port valves arrangement

One-side proportional electrohydraulic control
TYPE: **DPX100/QZ-ED-E101(80\80)-8EZ3LQ-SAE-12VDC**
CODE: 640100112S
DESCRIPTION: With lever control, without port valves arrangement
TYPE: **DPX100/PZ-ED-E101(80\80)-8EZ3LQ.U3T-SAE-12VDC**
CODE: 640100113S
DESCRIPTION: With lever control and port valves arrangement

2C High pressure working section *

Codes are referred to Right Inlet working sections

Proportional hydraulic control
TYPE: **DPX100HP/Q-ED-E101(80\80)-8IMN-SAE**
CODE: 640105124S
DESCRIPTION: Without port valves arrangement
TYPE: **DPX100HP/P-ED-E101(80\80)-8IMN.U3(100)-SAE**
CODE: 640105125S
DESCRIPTION: With antishock valves

Two-side proportional electrohydraulic control
TYPE: **DPX100HP/QE-ED-E101(80\80)-8EB3TF3-SAE-12VDC**
CODE: 640105126S
DESCRIPTION: With spool stroke limiter, without port valve arrangement
TYPE: **DPX100HP/PE-ED-E101(80\80)-8EB3TF3.U3T-SAE-12VDC**
CODE: 640105127S
DESCRIPTION: As previous one with port valves arrangement
TYPE: **DPX100HP/PE-ED-E101(80\80)-8EB3TLH.U3T-SAE-12VDC**
CODE: 640105128S
DESCRIPTION: With lever control and port valves arrangement

One-side proportional electrohydraulic control
TYPE: **DPX100HP/QZ-ED-E101(80\80)-8EZ3LQ-SAE-12VDC**
CODE: 640100114S
DESCRIPTION: With lever control, without port valves arrangement
TYPE: **DPX100HP/PZ-ED-E101(80\80)-8EZ3LQ.U3T-SAE-12VDC**
CODE: 640100115S
DESCRIPTION: With lever control and port valves arrangement

2D High Flow working section *

Codes are referred to Right Inlet working sections

Proportional hydraulic control
TYPE: **DPX100HF/Q-ED-E101(120\120)-8IMN-SAE**
CODE: 640100025S
DESCRIPTION: Without port valves arrangement
TYPE: **DPX100HF/P-ED-E101(120\120)-8IMN.U3(100)-SAE**
CODE: 640100026S
DESCRIPTION: With antishock valves

Two-side proportional electrohydraulic control
TYPE: **DPX100HF/QE-ED-E101(120\120)-8EB3TF3-SAE-12VDC**
CODE: 640100027S
DESCRIPTION: With spool stroke limiter, without port valves arrangement
TYPE: **DPX100HF/PE-ED-101(120/120)-8EB3TLH.U3T-SAE-12VDC**
CODE: 640100028S
DESCRIPTION: With lever control and port valves arrangement

3 Outlet section *

The sections listed are by way of example; the complete list of available otlet sections is on page 57.
Outlet section are the same for Standard and HP pressure configuration

For proportional hydraulic configuration
TYPE: **DPX100/RF-SAE** CODE: 640305003S
DESCRIPTION: With bleed valve and upper T2 port (plugged)

For electrohydraulic configuration
TYPE: **DPX100/RDN-NOTAP(VL)-SAE** CODE: 640305002S
DESCRIPTION: Without pressure reducing valve, external V pilot and L drain ports, with Bleed valve and side T1 port (plugged)

4 Section threading

Only specify if it is different from **BSP** standard (see page 7).

5 Voltage

Specify the voltage of electric devices.

6 Assembling kit

For tie rods list see page 57.

NOTE (*): Codes are referred to **UN-UNF** thread.

LL working section part ordering codes (hydraulic)

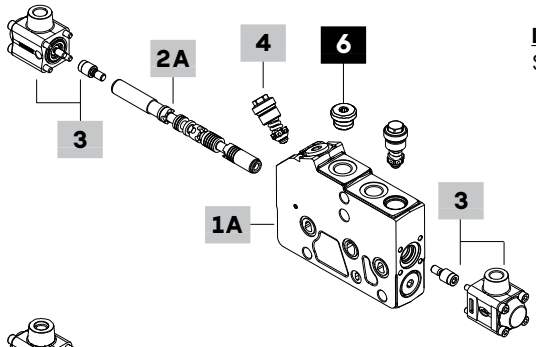

Low Leak working section:
Standard pressure configuration only

flow on A/B ports (l/min) — Valve setting (bar): A port, B port

DPX100 / PLL - ED - E101LL(80/80) - 8IMN . U1(100) U2(120) - SAE

1A — Right Inlet — 2A — 3 — 4 — 5

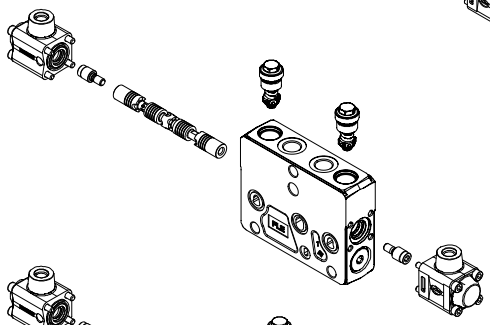

Standard Pressure working section, Right Inlet configuration:
Section kit and other components (e.g. spool, control kit) are the same of Left Inlet Standard configuration; for codes see pages 66-68.
The acronym "ED" must be added in section description as indicated below.

DPX100/P- ED -E101(80/80)-8IMN.U1(100)U2(120)-SAE

Right Inlet

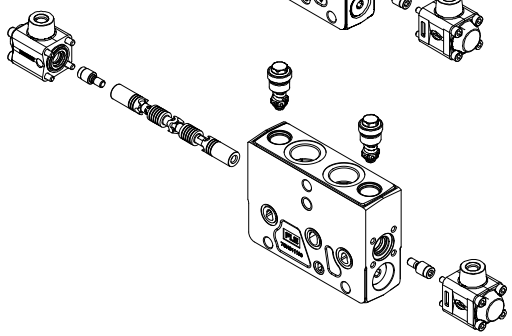

HF working section, Right Inlet configuration:
Section kit and other components (e.g. spool, control kit) are the same of Left Inlet High Flow configuration; for codes see page 101.
The acronym "ED" must be added in section description as indicated below.

DPX100HF/P- ED -E101(80/80)-8IMN.U1(100)U2(120)-SAE

Right Inlet

1A Low Leak working section * page 114

For proportional hydraulic control
TYPE: **DPX100/QLL-IM-SAE-FPM** CODE: 5EL1045010ALV
DESCRIPTION: Without port valves arrangement
TYPE : **DPX100/PLL-IM-SAE-FPM** CODE: 5EL1045000ALV
DESCRIPTION: With port valves arrangement

2A Spool page 116

TYPE	CODE	DESCRIPTION
Double acting with A and B closed in neutral position		
E101LL(80)	3CU7710101L	80 l/min *(21 US gpm)* flow
E108LL(60)	3CU7710108L	60 l/min *(16 US gpm)* flow
E123LL(50)	3CU7710123L	50 l/min *(13.2 US gpm)* flow
E105LL(40)	3CU7710105L	40 l/min *(10.5 US gpm)* flow
E113LL(30)	3CU7710113L	30 l/min *(7.9 US gpm)* flow
E106LL(20)	3CU7710106L	20 l/min *(5.3 US gpm)* flow
E110LL(10)	3CU7710110L	10 l/min *(2.6 US gpm)* flow
E159LL(5)	3CU7710159L	5 l/min *(1.3 US gpm)* flow
Single acting on A or B, other port plugged: SAE8 plug is required		
E301-E401LL(80)	3CU7710301L	80 l/min *(21 US gpm)* flow
E305-E405LL(60)	3CU7731305L	60 l/min *(16 US gpm)* flow
E304-E404LL(40)	3CU7731304L	40 l/min *(10.5 US gpm)* flow
E303-E403LL(20)	3CU7731303L	20 l/min *(5.3 US gpm)* flow
Double acting with A and B closed in neutral pos., 4 positions, floating in 4th pos. with spool in: type 13IMS control is required		
I504LL(60)	YCU7742504L	60 l/min *(16 US gpm)* flow
I503LL(20)	YCU7742503L	20 l/min *(5.3 US gpm)* flow

3 Proportional hydraulic control * page 82

Controls for LL sections are the same as for Standard Pressure sections

TYPE	CODE	DESCRIPTION
8IMN-SAE	5IDR204304V	Range 8-27 bar *(116-392 psi)*
8IMF3N-SAE	5IDR204314V	As previous one, with spool stroke limiter
8IMXN-SAE	5IDR204303V	Range 7.5-24 bar *(109-348 psi)*
8IMXF3N-SAE	5IDR204313V	As previous one, with spool stroke limiter
For floating circuit (spool I5)		
13IMS-SAE	5IDR207350V	Range 6.5-15.5 / 8-22.5 bar *(94-225 / 116-326 psi)*

4 Port valves page 94

For complete valves list see page 65

TYPE	CODE	DESCRIPTION
U025	5KIT330025	Setting: 25 bar *(360 psi)*

5 Section threading

Only specify if it is different from **BSP** standard (see page 7).

6 Plug for single acting spool *

CODE	DESCRIPTION
3XTAP822150	SAE8 plug

NOTE (*): Codes are referred to **UN-UNF** thread.

LL working section part ordering codes (electrohydraulic)

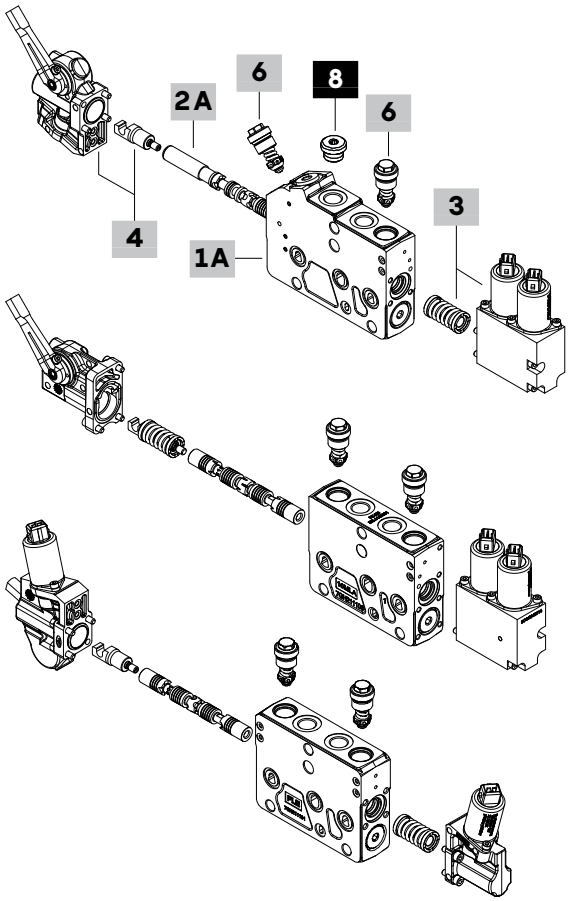

Low Leak working section:
Only for Standard Pressure and with one-side electrohydraulic control

flow on A/B ports (l/min)

DPX100 / PZLL - ED - E101LL(80/80)-

1A — Right Inlet — 2A

Valve setting (bar)
A port — B port

8EZ3 LQF3 . U1(100) U2(120) - SAE - 12VDC

3 — 4 — 6 — 7 — 3

Standard Pressure working section, Right Inlet configuration:
It's fitted with one-side or two-side electrohydraulic control. Section kit and other components (e.g. spool, control kit) are the same of Left Inlet Standard configuration; for codes see pages 70-71. The acronym "ED" must be added in section description as indicated below.

DPX100/PE-ED-E101(80/80)-8EB3TLH.U1(100)U2(120)-SAE-12VDC

Right Inlet

DPX100/PZ-ED-E101(80/80)-8EZLQ.U1(100)U2(120)-SAE-12VDC

Right Inlet

1A Low Leak working section * page 114

For one-side electrohydraulic control

TYPE: **DPX100/QZLL-SAE-FPM** CODE: 5EL1045019LV
DESCRIPTION: Without port valves arrangement
TYPE: **DPX100/PZLL-SAE-FPM** CODE: 5EL1047031V
DESCRIPTION: With port valves arrangement

2A Spool page 116

TYPE	CODE	DESCRIPTION
Double acting with A and B closed in neutral position		
E101LL(80)	3CU7710101L	80 l/min *(21 US gpm)* flow
E108LL(60)	3CU7710108L	60 l/min *(16 US gpm)* flow
E123LL(50)	3CU7710123L	50 l/min *(13.2 US gpm)* flow
E105LL(40)	3CU7710105L	40 l/min *(10.5 US gpm)* flow
E113LL(30)	3CU7710113L	30 l/min *(7.9 US gpm)* flow
E106LL(20)	3CU7710106L	20 l/min *(5.3 US gpm)* flow
E110LL(10)	3CU7710110L	10 l/min *(2.6 US gpm)* flow
E159LL(5)	3CU7710159L	5 l/min *(1.3 US gpm)* flow
Single acting on A or B, other port plugged: SAE8 plug is required		
E301-E401LL(80)	3CU7710301L	80 l/min *(21 US gpm)* flow
E305-E405LL(60)	3CU7731305L	60 l/min *(16 US gpm)* flow
E304-E404LL(40)	3CU7731304L	40 l/min *(10.5 US gpm)* flow
E303-E403LL(20)	3CU7731303L	20 l/min *(5.3 US gpm)* flow
Double acting with A and B closed in neutral pos., 4 positions, floating in 4th pos. with spool in: type 13IMS control is required		
E504LL(60)	3CU7742504L	60 l/min *(16 US gpm)* flow
E503LL(20)	3CU7742503L	20 l/min *(5.3 US gpm)* flow

8 Plug for single acting spool *

CODE	DESCRIPTION
3XTAP822150	SAE8 plug

3 One-side electrohydr.control; "A" side page 118

These controls must be coupled with "B" side options

TYPE	CODE	DESCRIPTION
8EZ3LL-12VDC	5IDR604300LV	With AMP connector
8EZ3LL-24VDC	5IDR604301LV	As previous one
8EZ34LL-12VDC	5IDR604302LV	With Deutsch connector
8EZ34LL-24VDC	5IDR604303LV	As previous one
For floating circuit (spool E5)		
13EZ3LL-12VDC	5IDR614300LV	With AMP connector
13EZ3LL-24VDC	5IDR614301LV	As previous one
13EZ34LL-12VDC	5IDR614302LV	With Deutsch connector
13EZ34LL-24VDC	5IDR614303LV	As previous one

4 One-side electrohydr.option; "B" side page 118

These options must be coupled with "A" side controls

TYPE	CODE	DESCRIPTION
LQ	5LEV100700ALV	Lever box
LQF3	5LEV100701LV	Lever box with spool stroke limiter
LQSL	5COP204100LV	Without lever with endcap

6 Port valves page 94

For complete valves list see page 65

TYPE	CODE	DESCRIPTION
U025	5KIT330025	Setting: 25 bar *(360 psi)*

7 Section threading

Only specify if it is different from **BSP** standard (see page 7).

NOTE (*): Codes are referred to **UN-UNF** thread.

LL working section

Dimensions and hydraulic circuit: Low Leak section

Low Leak section for proportional hydraulic control, Right Inlet

Type QLL-ED

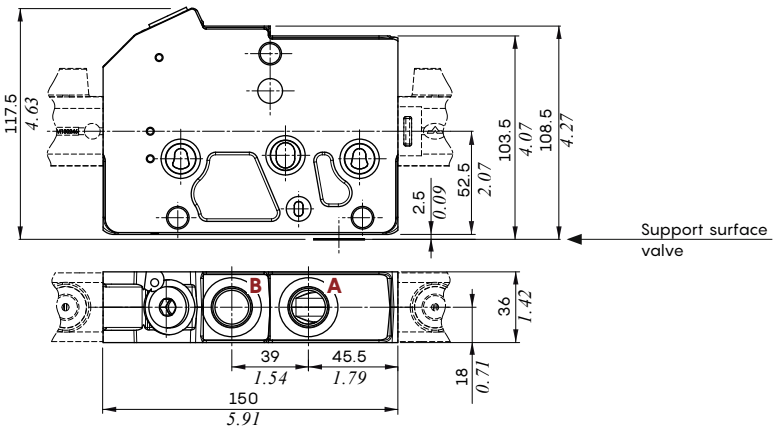

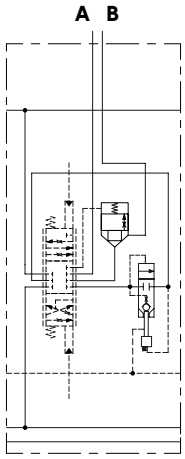

Type PLL-ED

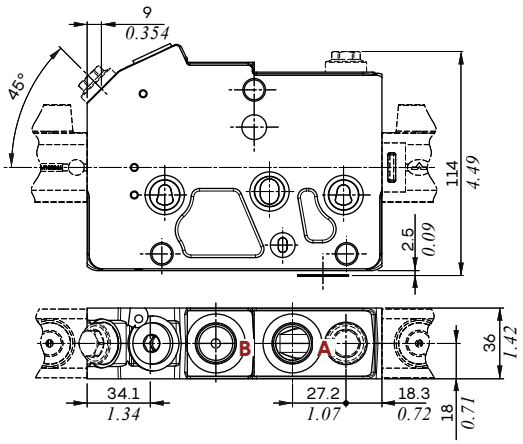

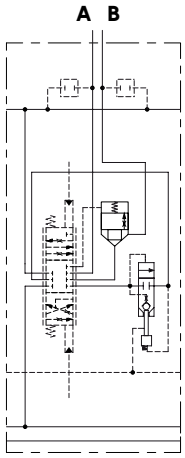

Low Leak section for electrohydraulic control, Right Inlet

Type QZLL-ED or PZLL-ED

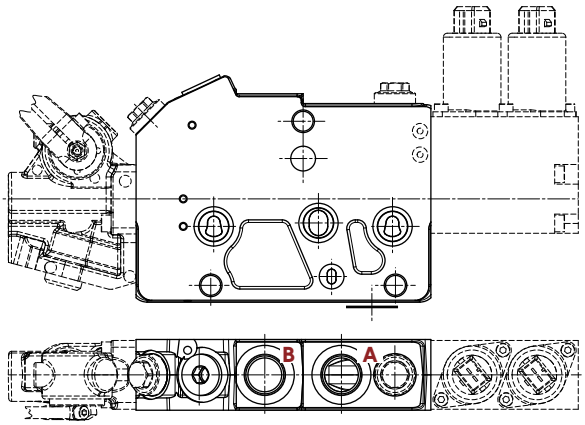

Type QZLL-ED

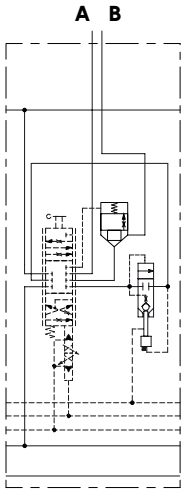

Type PZLL-ED

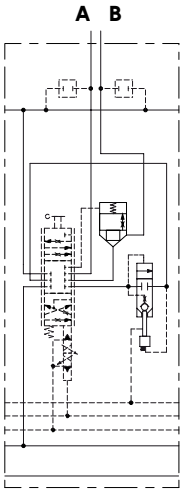

Dimensions and hydraulic circuit: section for Low Leak valve configuration

Section for proportional hydraulic control, Right Inlet

For Standard section dimensions see page 72, for HF section dimensions see page 104.

Standard section, type Q-ED
(SAE10 ports)

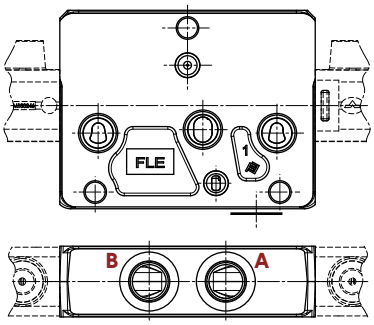

HF section, type Q-ED
(SAE12 ports)

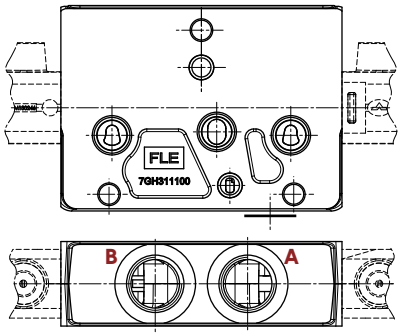

Type Q-ED

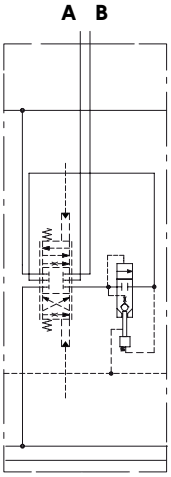

Type P-ED

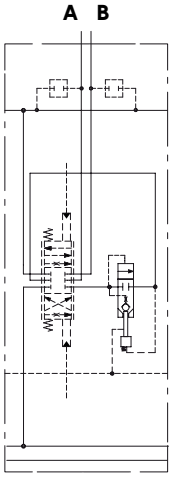

Standard section, type P-ED
(SAE10 ports)

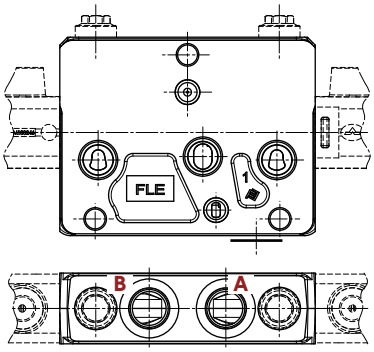

HF section, type P-ED
(SAE12 ports)

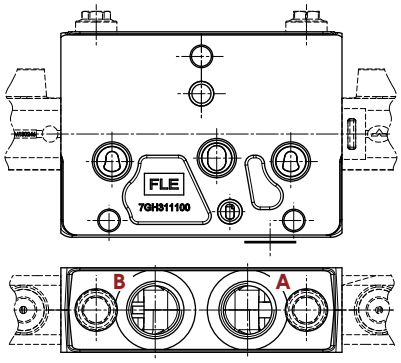

Section for electrohydraulic control, Right Inlet

Type QE-ED o PE-ED

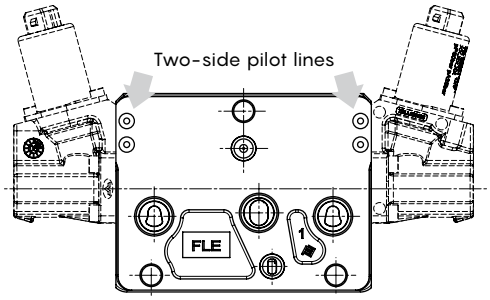

Type QE-ED

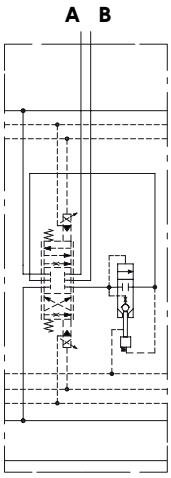

Type PE-ED

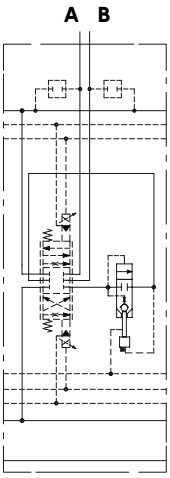

LL working section

Spool

Performance an sensitivity diagrams are the same as spool for stadard section; see pages 73, 74.

For Low Leak section

Type E1..
A, B closed in neutral position

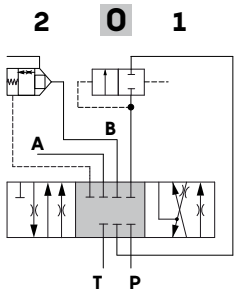

Stroke
position 1: + 6.5 mm *(+ 0.26 in)*
position 2: - 6.5 mm *(- 0.26 in)*

Type E3..
Single acting on A

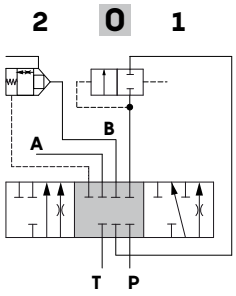

Stroke
position 1: + 6.5 mm *(+ 0.26 in)*
position 2: - 6.5 mm *(- 0.26 in)*

Type E5..
Floating in 4th position (pos.3)

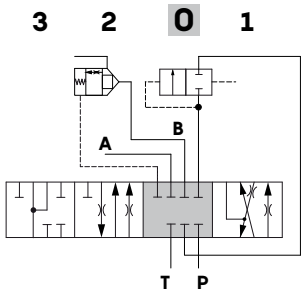

Stroke
position 1: + 6 mm *(+ 0.26 in)*
position 2: - 6 mm *(- 0.26 in)*
position 3: - 10.5 mm *(- 0.41 in)*

For Right Inlet standard section in Low Leak valve configuration

Type E1..
A, B closed in neutral position

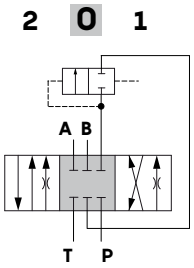

Stroke
position 1: + 6.5 mm *(+ 0.26 in)*
position 2: - 6.5 mm *(- 0.26 in)*

Type E2..
A, B to tank in neutral position

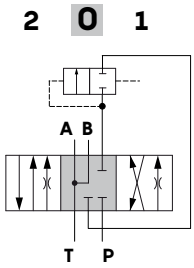

Stroke
position 1: + 6.5 mm *(+ 0.26 in)*
position 2: - 6.5 mm *(- 0.26 in)*

Type E2H..
A, B partially to tank
in neutral position

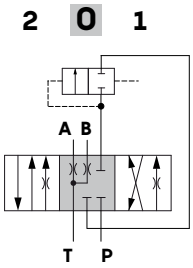

Stroke
position 1: + 6.5 mm *(+ 0.26 in)*
position 2: - 6.5 mm *(- 0.26 in)*

Type E3..
Single acting on A

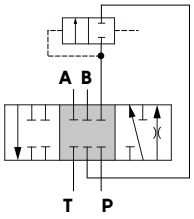

Stroke
position 1: + 6.5 mm *(+ 0.26 in)*
position 2: - 6.5 mm *(- 0.26 in)*

Type E4..
Single acting on B

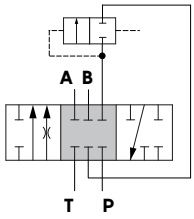

Stroke
position 1: + 6.5 mm *(+ 0.26 in)*
position 2: - 6.5 mm *(- 0.26 in)*

Type E5../I5..
Floating in 4th position (pos.3)

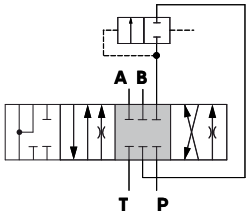

Stroke
position 1: + 6 mm *(+ 0.26 in)*
position 2: - 6 mm *(- 0.26 in)*
position 3: - 10.5 mm *(- 0.41 in)*

LL working section

Spool

In case of replacement of the spool, the code stamping must be oriented toward B port.

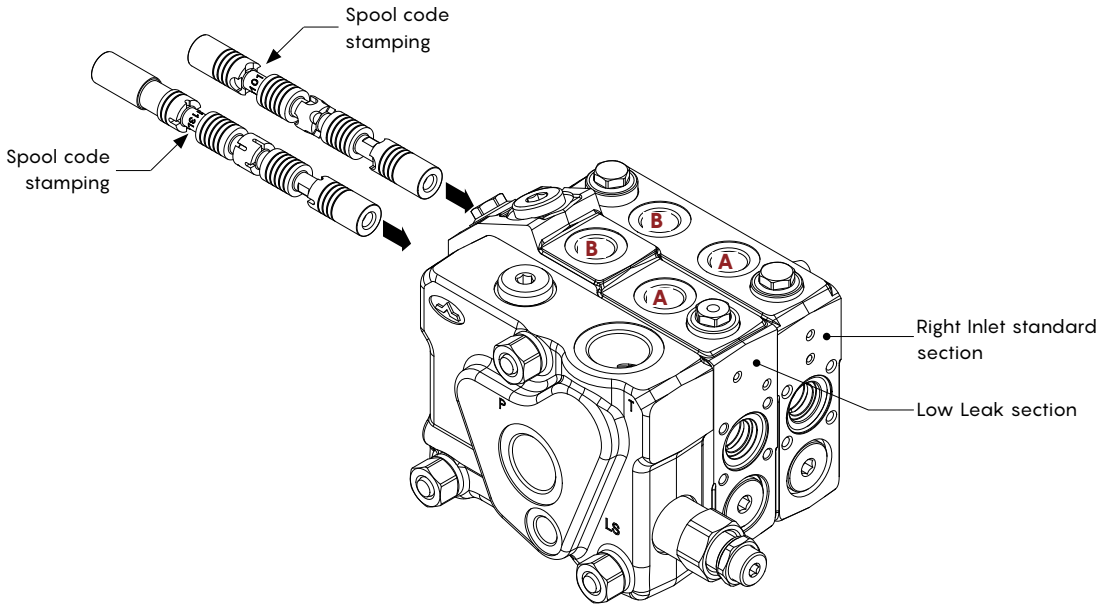

LL working section

One-side electrohydraulic control for Low Leak section: "A" side

The technical features are the same as the one-side electrohydraulic control for the standard section: see page 85.

Control types

❶: With AMP JPT connector - AMP JPT mating connector, code: 5CON003
❷: With Deutsch DT04 connector - Deutsch DT06-2S mating connector code: 5CON140031

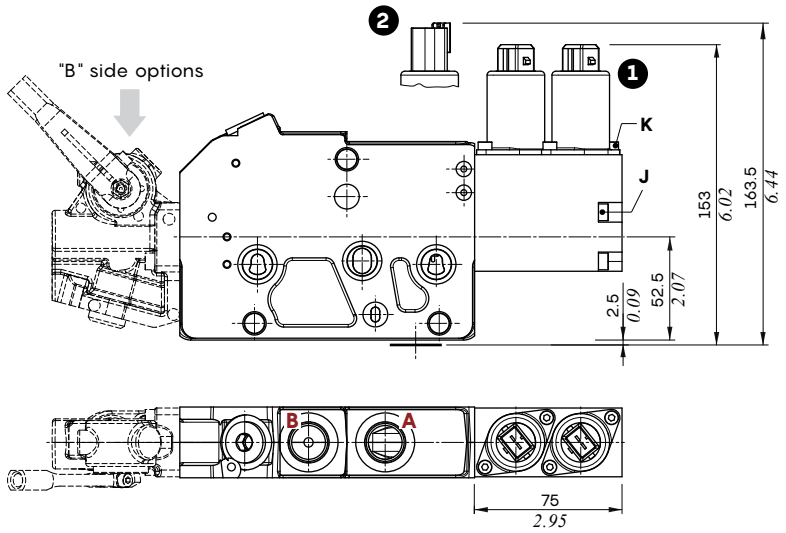

Types 8EZ3LL - 8EZ34LL

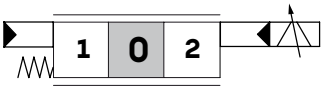

Types 13EZ3LL - 13EZ34LL
For floating circuit

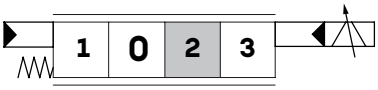

Wrenches and tightening torques
J = allen wrench 4 - 6.6 Nm *(4.9 lbft)*
K = allen wrench 3 - 5 Nm *(3.7 lbft)*

One-side electrohydraulic control: "B" side option

These options are available for one-side electyrohydraulic controls only.

Type LQ

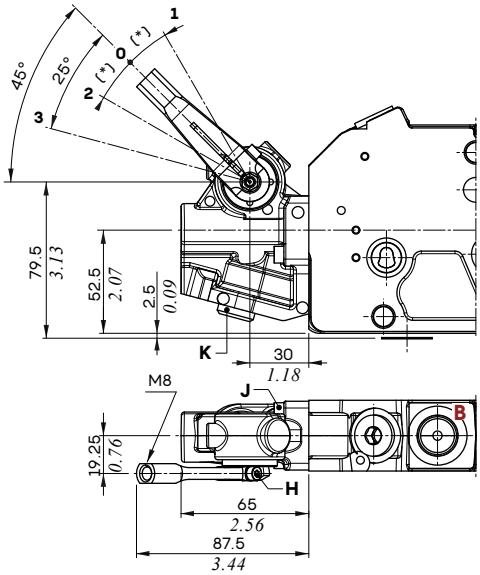

Angle (*)
15° with 8EZ3.. type controls
14° with 13EZ3.. type controls

Type LQF3
Spool stroke limiter on A and B ports

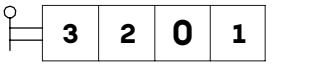

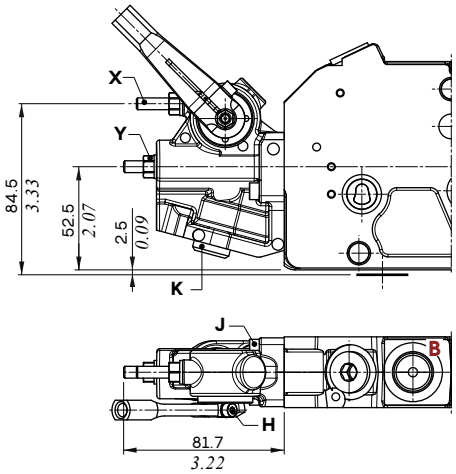

Type LQSL
With endcap

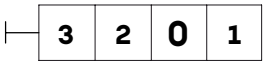

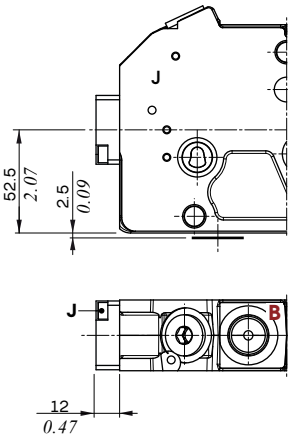

Wrenches and tightening torques
H = wrench 3 - 6.6 Nm *(4.9 lbft)*
J = allen wrench 4 - 6.6 Nm *(4.9 lbft)*
K = allen wrench 6 - 24 Nm *(7.7 lbft)*
X = allen wrench 3
Y = wrench 10 - 9.8 Nm *(7.2 lbft)*

Content

Dimensional data and performance . . . . . page 120
Hydraulic circuit
Configuration example with mechanical and hydraulic controls . . . . . page 121
Configuration example with electrohydraulic controls 121
Guide to configuration
Pressure peak reduction . . . . . page 122
High Pressure (HP) valve configuration 122
Directional valve with Low Leak working sections 123
Inlet section
Parts ordering codes . . . . . page 125
Dimensional data and hydraulic circuit 127
Main pressure relief valve 131
Solenoid operated unloading valve 131
Priority valve kit 132
Shut-off valve 132
Working section
Parts ordering code . . . . . page 133
Dimensional data and hydraulic circuit 137
Spool 138
"A" side spool positioner 140
"B" side spool control kit 141
Proportional hydraulic control 143
Electrohydraulic controls
Performane data . . . . . page 145
Spool position sensor 147
Two-side electrohyraulic controls 148
One-side electrohydraulic control: "A" side 151
One-side electrohydraulic control: "B" side options 152
Port valves 153
Outlet section
Parts ordering code . . . . . page 154
Dimensional data and hydraulic circuit 155

Dimensional data and performance

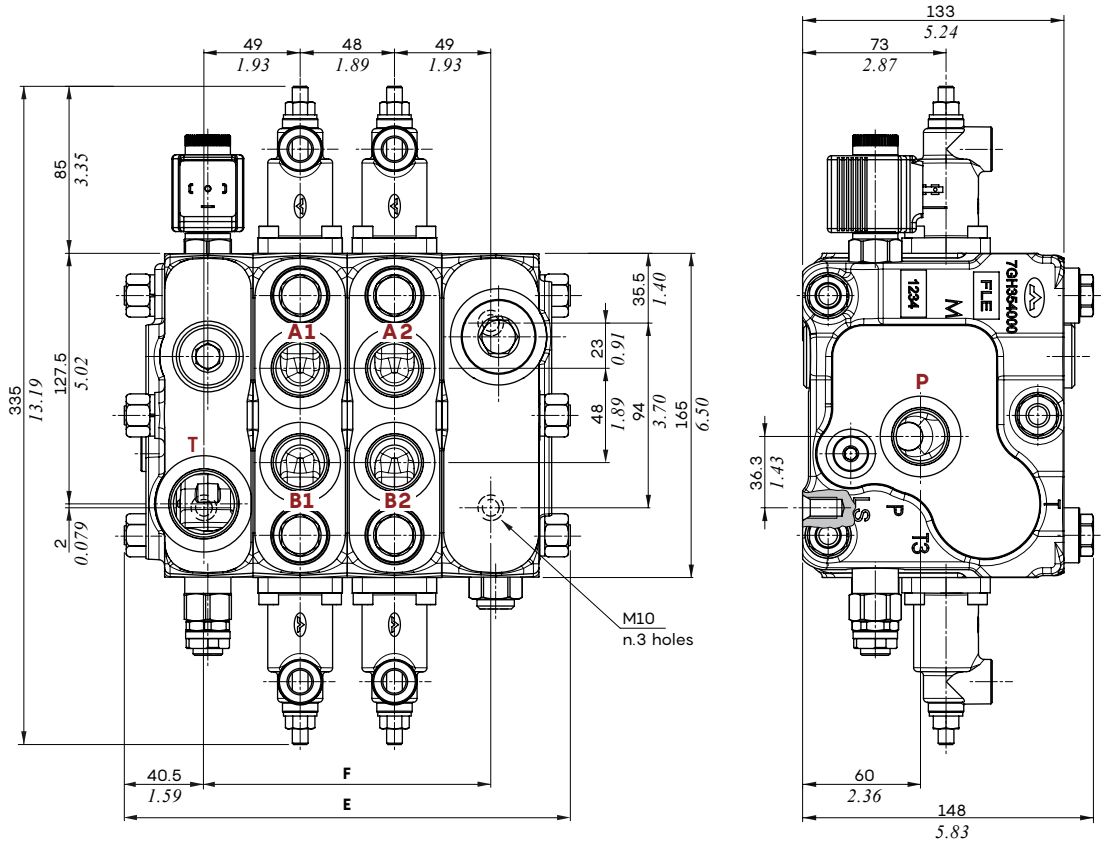

TYPE	E		F	
	mm	*in*	mm	*in*
DPX160/1	179	*7.05*	98	*3.86*
DPX160/2	227	*8.94*	146	*5.75*
DPX160/3	275	*10.83*	194	*7.64*
DPX160/4	323	*12.72*	242	*9.53*
DPX160/5	371	*14.61*	290	*11.42*
DPX160/6	419	*16.50*	338	*13.31*
DPX160/7	467	*18.39*	386	*15.20*
DPX160/8	515	*20.28*	434	*17.09*
DPX160/9	563	*22.17*	482	*18.98*
DPX160/10	611	*24.06*	530	*20.87*

P⇒T Pressure drop inlet compensator (margin pressure)

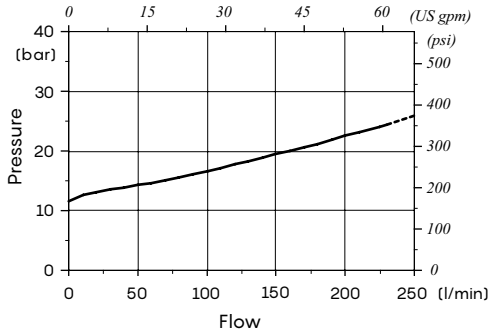

A(B)⇒T pressure drop (standard spool @ max.stroke)

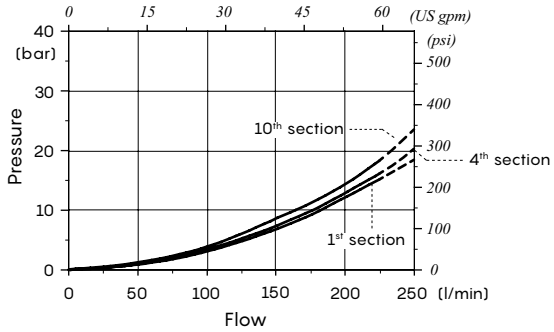

Hydraulic cuircuit

Configuration example with mechanical and hydraulic controls

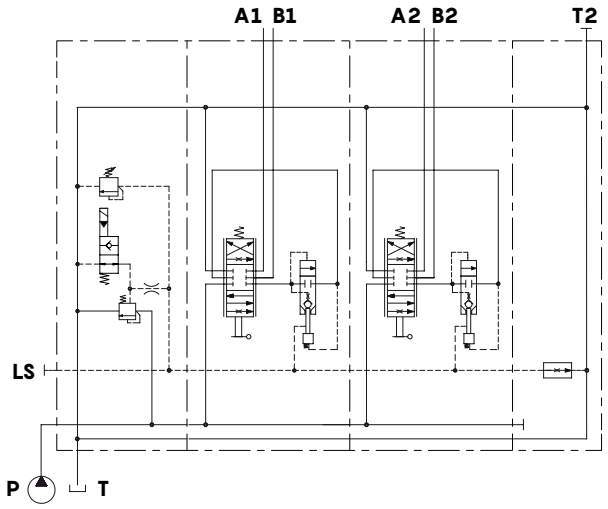

Open center circuit and lever control, with unloader valve, without port valve arrangement

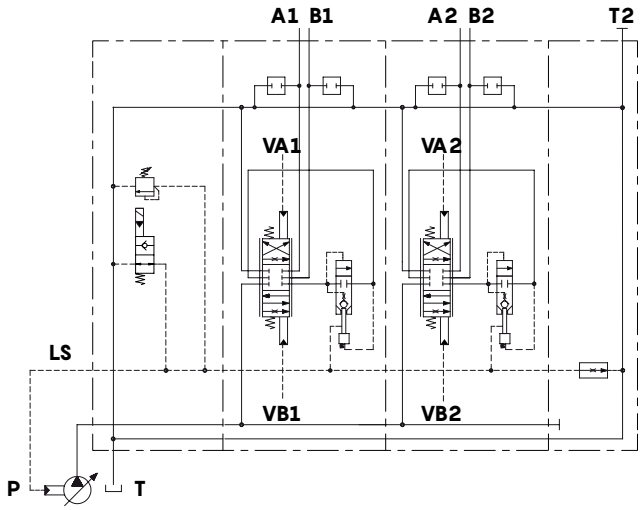

Closed center circuit and proportional hydraulic control, with unloader valve and port valve arrangement

Configuration example with electrohydraulic controls

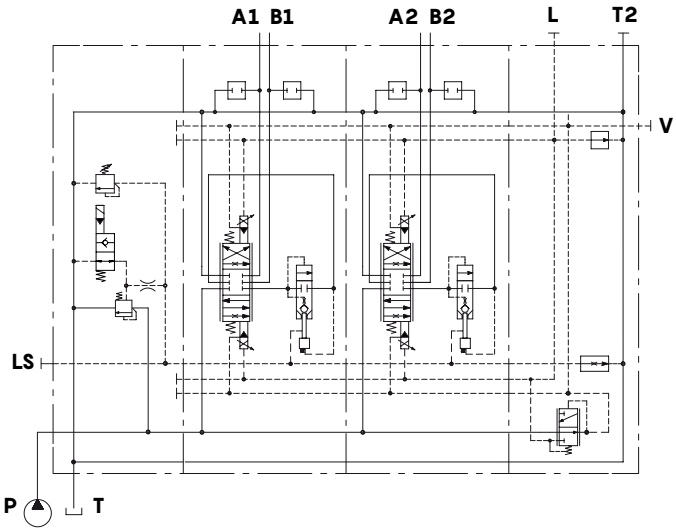

Open center circuit and two-side proportional electrohydraulic control, with unloader valve, port valve arrangement and pressure reducing valve, internal pilot and drain

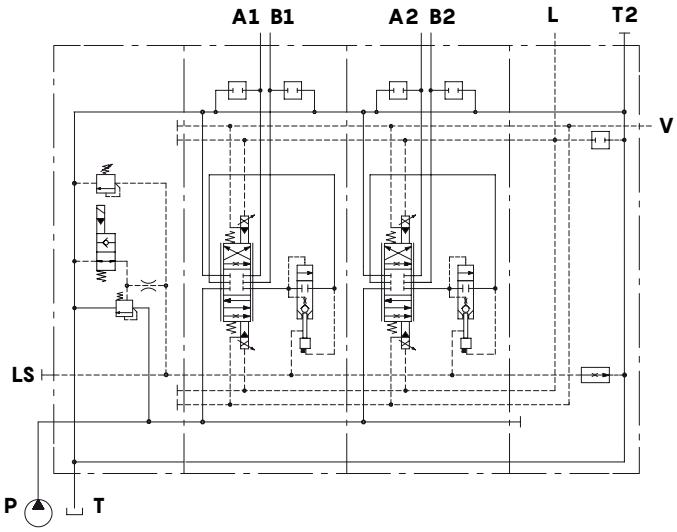

Open center circuit and two-side proportional electrohydraulic control, with unloader valve and port valve arrangement, without pressure reducing valve, external pilot and drain

Guide to configuration

Pressure peak reduction

Pressure peaks may occur in a port during normal machine operation, causing signal L.S. swings. If those pressure swings reach the inlet section or the pump compensators, they could cause an harsh and not confortable regulation, especially if they occur with high frequency.
The DPX Series directional valves, open and closed center ones, are available with inlet sections equipped with devices for L.S. signal peak reduction.

Standard configuration
Bidirectional restrictor on L.S. signal; it dampens the pressure peaks from L.S. line to inlet section compensator and vice versa.
SU option
Unidirectional restrictor on L.S. signal; it dampens the pressure peaks from L.S. line (and then from users) to inlet section compensator. It's recommended for applications that need soft start.
SO options
Unidirectional restrictor on L.S. signal; it dampens the pressure peaks from inlet section compensator to L.S. line. It's recommended for swings reduction occurred during normal operation.

High Pressure (HP) valve configuration

DPX160 Flow Sharing valves are available both for Standard and High pressure (HP) configuration.
The main difference between the two configurations is the max. reachable pressure.
In details:

DPX160
- Max. pressure on P inlet port and on A/B working ports = 300 bar - *4350 psi*

DPX160HP
- Max. pressure on P inlet port = 380 bar - *5550 psi*
- Max. pressure on A/B working ports = 420 bar - *6000 psi*

In addition to valve entirely configurated for Standard pressure or HP, a mixed configuration — Standard/HP — is available by combining only the sections needed.

Closed center type inlet section: one single solution for Standard and HP pressures.
Open center type inlet section: separate solutions for Standard and HP pressures..
Priority inlet section: configuration available only for Standard pressure.
Working sections: separate solutions for Standard and HP pressures.
Outlet section: one single solution for Standard and HP pressures.

Example of entirely Standard Pressure valve configuration

DPX160/2/AM1A(TGW3-175\ELN)/P-E108(150\150)-8IMNOH.U3T/Q-E108(150\150)-8IMNOH/RC1A-SAE-12VDC

- AM1A(TGW3-175\ELN): Std open center inlet section or Std Pressure closed center inlet section
- P-E108(150\150)-8IMNOH.U3T/Q-E108(150\150)-8IMNOH: Std Pressure working sections
- RC1A-SAE-12VDC: Standard Pressure outlet section

Example of entirely High Pressure (HP) valve configuration

DPX160HP/2/AM1A(TGW5-300\ELN)/P-E108(150\150)-8IMNOH.U3T/Q-E108(150\150)-8IMNOH/RC1A-SAE-12VDC

- AM1A(TGW5-300\ELN): HP open center inlet section or Std Pressure closed center inlet section
- P-E108(150\150)-8IMNOH.U3T/Q-E108(150\150)-8IMNOH: HP working sections
- RC1A-SAE-12VDC: Standard Pressure outlet section

Example of mixed - Standard/HP - valve configuration

DPX160/2/AM1A(TGW3-175\ELN)/P-E108(150\150)-8IMNOH.U3T/HP-Q-E108(150\150)-8IMNOH/RC1A-SAE-12VDC

- AM1A(TGW3-175\ELN): Std open center inlet section or Std Pressure closed center inlet section
- P-E108(150\150)-8IMNOH.U3T: Std Pressure working section
- HP-Q-E108(150\150)-8IMNOH: HP working section
- RC1A-SAE-12VDC: Standard Pressure outlet section

Complete section ordering codes

A Mechanical-hydraulic controls configuration:

Nr. of working sections

DPX160/2/AN1A(TGW3-175/ELN)/P-108(150/150)-8SLP.U3T/Q-E108(150/150)-8IMOHF3N/RC1A-SAE-12VDC

1A 1B 2A 2B 3 4 5

DPX160: Standard pressure valve
DPX160HP: High Pressure valve
For working conditions and guide configuration see page 5, 6, 122

B Electrohydraulic controls configuration:

DPX160/2/AN1A(TGW3-175/ELN)/PZ-E108(150/150)-8EZ3LQ.U3T/PE-E108(150/150)-8EB3F3.U3T/RCR3A-SAE-12VDC

1A 1B 2A 2B 3 4 5

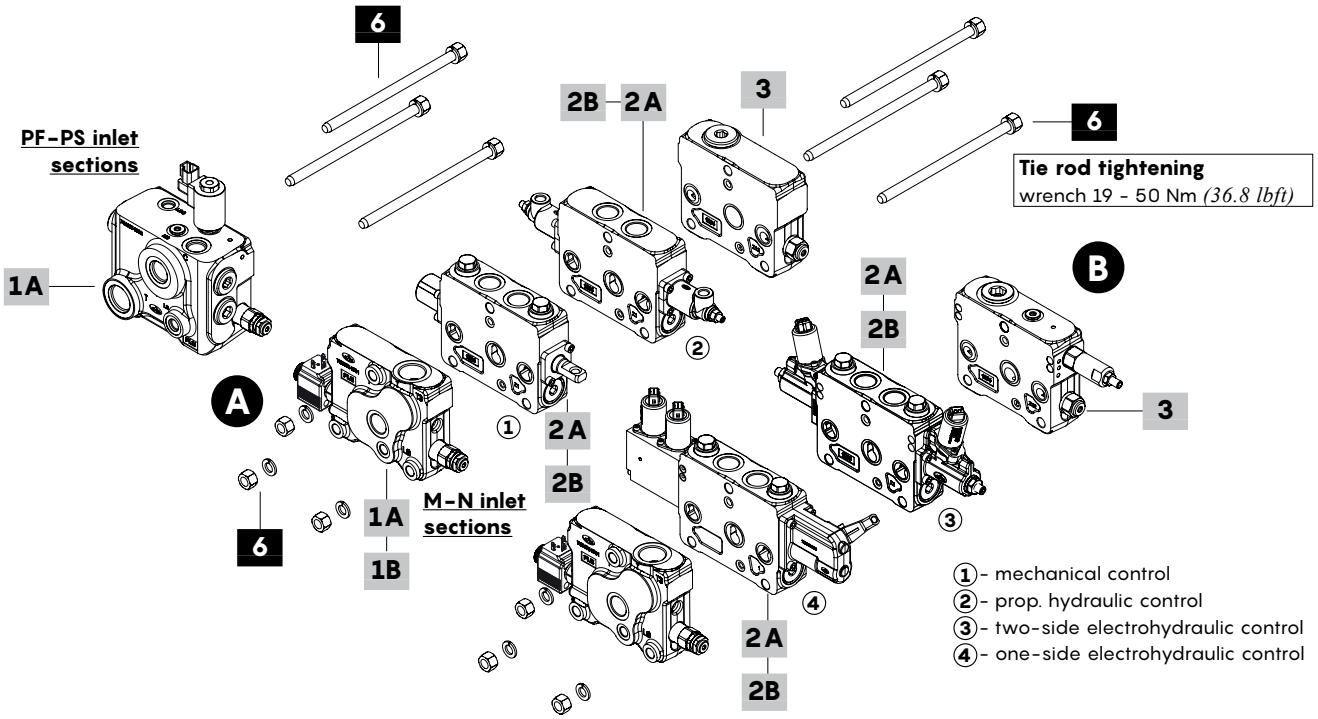

1A Std pressure inlet section *

Open Center circuit
TYPE: **DPX160/M3B(TGW3-175/ELN)-SAE-12VDC**
CODE: 650205017S
DESCRIPTION: With compensator, press. relief valve and unloader valve, with P-T-LS-M ports (LS-M plugged)
TYPE: **DPX160/M3B(SO/TGW3-175/ELN)-SAE-12VDC**
CODE: 650205019S
DESCRIPTION: As previous one with non-return flow limiter from inlet section to working section and by-pass valve
TYPE: **DPX160/M3B(SU/TGW3-175/ELN)-SAE-12VDC**
CODE: 650205018S
DESCRIPTION: With non-return flow limiter from working section to inlet section and by-pass valve
TYPE: **DPX160/M4B(TGW3-175/ELN)-SAE-12VDC**
CODE: 650205317S
DESCRIPTION: As type M3, with T3 side outlet port (plugged)
TYPE: **DPX160/PF1A\TGW3-175\VP-D(1)-SB10-Q40\CF(1)-SB14-SAE**
CODE: 650205301S
DESCRIPTION: **Designed for steering**, with compensator, priority valve, shut-off valve and pressure relief valve, with P-T-LS-M3-C-LSC ports (M3-LS plugged). Special tie rods are required

1A Std pressure inlet section *

Closed Center circuit
TYPE: **DPX160/N1A(TGW3-175/ELN)-12VDC**
CODE: 650205013
DESCRIPTION: Without compensator, with pressure relief valve and unloader valve, with P-T-LS ports
TYPE: **DPX160/N1A(SO/TGW3-175/ELN)-12VDC**
CODE: 650205015S
DESCRIPTION: As previous one with non-return flow limiter from inlet section to working section and by-pass valve
TYPE: **DPX160/N1A(SU/TGW3-175/ELN)-SAE-12VDC**
CODE: 650205014S
DESCRIPTION: With non-return flow limiter from working section to inlet section and by-pass valve
TYPE: **DPX160/N2A(TGW3-175/ELN)-SAE-12VDC**
CODE: 650205016S
DESCRIPTION: As N1 type, with T3 side outlet port (plugged)
TYPE: **DPX160/PS1A\TGW3-175\VP-D(1)-SB10-Q40\ESO32N-SAE-12VDC**
CODE: 650205302S
DESCRIPTION: **Designed for steering**, without compensator, with priority valve and pressure relief valve, with P-T-LS-M3-C-LSC port (M3-LS plugged). Special tie rods are required

NOTE (*): Codes are referred to **UN-UNF** thread.

Complete section ordering codes

1B High pressure inlet section *

Open Center circuit
TYPE: **DPX160HP/M3B(TGW5-350/ELN)-SAE-12VDC**
CODE: 650205021S
DESCRIPTION: With compensator, press. relief valve and unloader valve, with P-T-LS-M ports (LS-M plugged)
TYPE: **DPX160HP/M3B(SO/TGW5-350/ELN)-SAE-12VDC**
CODE: 650205023S
DESCRIPTION: As previous one with non-return flow limiter from inlet section to working section and by-pass valve
TYPE: **DPX160HP/M3B(SU/TGW5-350/ELN)-SAE-12VDC**
CODE: 650205022S
DESCRIPTION: With non-return flow limiter from working section to inlet section and by-pass valve
Closed Center circuit
Refer to "Std pressure" inlet sections (except PS section)

2A Std pressure working section *

Mechanical control
TYPE: **DPX160/Q-108(150/150)-8SLP-SAE**
CODE: 650155001S
DESCRIPTION: With dust-proof plate, without port valve arrangement
TYPE: **DPX160/P-108(150/150)-8SLP.UL3T-SAE**
CODE: 650105046S
DESCRIPTION: As previous one with port pressure relief valve arrangement
TYPE: **DPX160/P-108(150/150)-8SLP.US3T-SAE**
CODE: 650105047S
DESCRIPTION: With port antishock valve arrangement
Proportional hydraulic control
TYPE: **DPX160/Q-E108(150/150)-8IMOHF3N-SAE**
CODE: 650100008S
DESCRIPTION: With spool stroke limiter, without port valve arrang.
TYPE: **DPX160/P-E108(150/150)-8IMOHF3N.UL3T-SAE**
CODE: 650100006S
DESCRIPTION: As previous one with port pressure relief valves arrang.
TYPE: **DPX160/P-E108(150/150)-8IMOHF3N.US3T-SAE**
CODE: 650100007S
DESCRIPTION: With port antishock valve arrangement
Two-side proportional electrohydraulic control
TYPE: **DPX160/QE-E108(150/150)-8EB3F3-SAE-12VDC**
CODE: 650105048S
DESCRIPTION: With spool stroke limiter, without port valve arrang.
TYPE: **DPX160/PE-E108(150/150)-8EB3F3.UL3T-SAE-12VDC**
CODE: 650105049S
DESCRIPTION: As previous one with port pressure relief valves arrang.
TYPE: **DPX160/PE-E108(150/150)-8EB3F3.US3T-SAE-12VDC**
CODE: 650105050S
DESCRIPTION: With port antishock valve arrangement
One-side proportional electrohydraulic control
TYPE: **DPX160/QZ-E108(150/150)-8EZ3LQF3-SAE-12VDC-FPM**
CODE: 650105036V
DESCRIPTION: With spool stroke limiter, without port valves arrang.
TYPE: **DPX160/PZ-E108(150/150)-8EZ3LQF3.UL3T-SAE-12VDC-FPM**
CODE: 650105037V
DESCRIPTION: As previous one with port pressure relief valves arrang.
TYPE: **DPX160/PZ-E108(150/150)-8EZ3LQF3.US3T-SAE-12VDC-FPM**
CODE: 650105038V
DESCRIPTION: With port antishock valve arrangement

2B High pressure working section *

Mechanical control
TYPE: **DPX160HP/Q-108(150/150)-8SLP-SAE**
CODE: 650115007S
DESCRIPTION: With dust-proof plate, without port valve arrangement
TYPE: **DPX160HP/P-108(150/150)-8SLP.US3T-SAE**
CODE: 650105032S
DESCRIPTION: As previous one with port antishock valve arrangement
Proportional hydraulic control
TYPE: **DPX160HP/Q-E108(150/150)-8IMOHF3N-SAE**
CODE: 650115008S
DESCRIPTION: With spool stroke limiter, without port valve arrang.
TYPE: **DPX160HP/P-E108(150/150)-8IMOHF3N.US3T-SAE**
CODE: 650105033S
DESCRIPTION: As previous one with port antishock valve arrangement

2B High pressure working section *

Two-side proportional electrohydraulic control
TYPE: **DPX160HP/QE-E108(150/150)-8EB3F3-SAE-12VDC**
CODE: 650115009S
DESCRIPTION: With spool stroke limiter, without port valve arrang.
TYPE: **DPX160HP/PE-E108(150/150)-8EB3F3.US3T-SAE-12VDC**
CODE: 650105034S
DESCRIPTION: As previous one with port antishock valve arrangement
One-side proportional electrohydraulic control
TYPE: **DPX160HP/QZ-E108(150/150)-8EZ3LQF3-SAE-12VDC-FPM**
CODE: 650105039V
DESCRIPTION: With spool stroke limiter, without port valve arrang.
TYPE: **DPX160HP/PZ-E108(150/150)-8EZ3LQF3.UL3T-SAE-12VDC-FPM**
CODE: 650105040V
DESCRIPTION: As previous one with port pressure relief valve arrang.
TYPE: **DPX160HP/PZ-E108(150/150)-8EZ3LQF3.US3T-SAE-12VDC-FPM**
CODE: 650105041V
DESCRIPTION: With port antishock valve arrangement

3 Outlet section *

Outlet section is the same type for standard and High Pressure valve
For mechanical or proportional hydraulic configuration
TYPE: **DPX160/RC1A-SAE** CODE: 650305002S
DESCRIPTION: With bleed valve and T2 upper port (plugged)
TYPE: **DPX160/RC3A-SAE** CODE: 650305004S
DESCRIPTION: With bleed valve and T2, P1-T1-LS1 side ports (plugged)
TYPE: **DPX160/RC3A-CL-SAE-12VDC** CODE: 650305020S
DESCRIPTION: As previous one , with clamp release function
For electrohydraulic or mixed configuration
TYPE: **DPX160/RCN1A-SAE** CODE: 650305014S
DESCRIPTION: Without pressure reducing valve, external pilot and drain (V-L ports), with Bleed valve and T2 upper port (plugged)
TYPE: **DPX160/RCN3A-SAE** CODE: 650305016S
DESCRIPTION: As previous one, with P1-T1-LS1 side ports (plugged)
TYPE: **DPX160/RCN3A-CL-SAE-12VDC** CODE: 650305021S
DESCRIPTION: As previous, with clamp release function
TYPE: **DPX160/RCR1A-TAP(VL)-SAE** CODE: 650305005S
DESCRIPTION: With pressure reducing valve and Bleed valve, internal pilot and drain (V-L ports plugged), with T2 upper port (plugged)
TYPE: **DPX160/RCR3A-TAP(VL)-SAE** CODE: 650305017S
DESCRIPTION: As previous one, with P1-T1-LS1 side ports (plugged)
TYPE: **DPX160/RCR3A-CL-TAP(VL)-SAE-12VDC**
CODE: 650305022V
DESCRIPTION: As previous one, with clamp release function
Note: for outlet sections with different port arrangement please contact Sales Dpt.

4 Valve threading

Only specify if it is different from **BSP** standard (see page 7).

6 Voltage

Specify the voltage of electric devices.

Assembling kit

CODE	DESCRIPTION	CODE	DESCRIPTION
Standard tie rods: for M and N inlet sections			
5TIR112179	for 1 work.section	5TIR112419	for 6 work.sections
5TIR112227	for 2 work.sections	5TIR112467	for 7 work.sections
5TIR112275	for 3 work.sections	5TIR112515	for 8 work.sections
5TIR112323	for 4 work.sections	5TIR112563	for 9 work.sections
5TIR112371	for 5 work.sections	5TIR112611	for 10 work.sections
Special tie rods: for PF and PS inlet sections			
5TIR112141	for 1 work.section	5TIR112381	for 6 work.sections
5TIR112189	for 2 work.sections	5TIR112429	for 7 work.sections
5TIR112237	for 3 work.sections	5TIR112477	for 8 work.sections
5TIR112285	for 4 work.sections	5TIR112525	for 9 work.sections
5TIR112333	for 5 work.sections	5TIR112573	for 10 work.sections

NOTE (*): Codes are referred to **UN-UNF** thread.

Inlet section part ordering codes

Valve setting (bar)

DPX160 / A N1 A (TGW3 - 175 / ELN) - ..... - 12VDC

1A 1B 2 3 5 4

DPX160: Standard pressure section
DPX160HP: High Pressure section

N: Closed Center

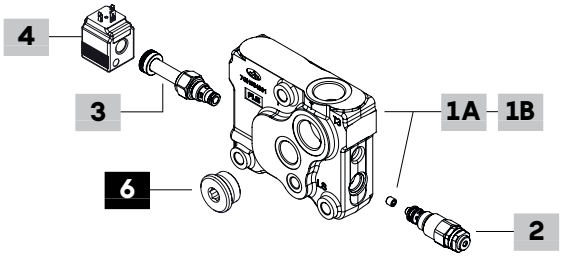

M: Open Center

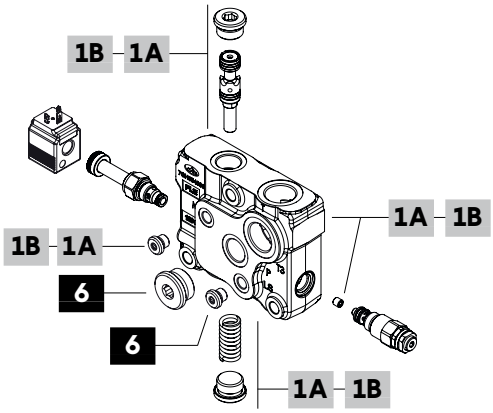

1A Std pressure inlet section kit * page 127

Open Center circuit

TYPE: **DPX160/M3-SAE-EL** CODE: YFIA105716S
DESCRIPTION: With compensator, P-T-LS-M ports (M plugged), arranged for unloader valve

TYPE: **DPX160/M3(SU)-SAE-EL** CODE: YFIA105710S
DESCRIPTION: As previous one with non return flow limiter from working section to inlet section and by-pass valve

TYPE: **DPX160/M3(SO)-SAE-EL** CODE: YFIA105711S
DESCRIPTION: With non return flow limiter from inlet section to working section and by-pass valve

TYPE: **DPX160/M4-SAE-EL** CODE: YFIA105708S
DESCRIPTION: As type M3, with T3 side outlet port

Closed Center circuit

TYPE: **DPX160/N1-SAE-EL** CODE: YFIA105720S
DESCRIPTION: Without compensator, with P-T-LS ports, arranged for unloader valve

TYPE: **DPX160/N1(SU)-SAE-EL** CODE: YFIA105727S
DESCRIPTION: As previous one with non return flow limiter from working section to inlet section and by-pass valve

TYPE: **DPX160/N1(SO)-SAE-EL** CODE: YFIA105728S
DESCRIPTION: With non return flow limiter from inlet section to working section and by-pass valve

TYPE: **DPX160/N2-SAE-EL** CODE: YFIA105715S
DESCRIPTION: As N1 type, with T3 side outlet port

1B High pressure inlet section kit * page 127

Open Center circuit

TYPE: **DPX160HP/M3-SAE-EL** CODE: YFIA105709S
DESCRIPTION: With compensator, P-T-LS-M ports (M plugged), arranged for unloader valve

TYPE: **DPX160HP/M3(SU)-SAE-EL** CODE: YFIA105712S
DESCRIPTION: As previous one with non return flow limiter from working section to inlet section and by-pass valve

TYPE: **DPX160HP/M3(SO)-SAE-EL** CODE: YFIA105713S
DESCRIPTION: With non return flow limiter from inlet section to working section and by-pass valve

Closed Center circuit

Refer to "Std pressure" inlet sections

2 Main pressure relief valve page 131

Valve standard setting is referred to 5 l/min *(1.3 US gpm)* flow.

TYPE	CODE	DESCRIPTION
(TGW2-80)	0MC09002000	Range 10-120 bar *(145-1750 psi)* std setting 80 bar *(1160 psi)*
(TGW3-175)	0MC09002001	Range 40-220 bar *(580-3200 psi)* std setting 175 bar *(2550 psi)*
(TGW4-250)	0MC09002002	Range 200-350 bar *(2900-5100 psi)* std setting 250 bar *(3600 psi)*
(TGW5-300)	0MC09002003	Range 290-385 bar *(4200-5600 psi(* std setting 300 bar *(4350 psi)*
SV	XTAP524340D	Relief valve blanking plug

3 Solenoid operated unloading valve page 131

TYPE	CODE	DESCRIPTION
ELN	0EF08002000	Without emergency override
ELV	0EF08002003	With screw type emergency override
ELP	0EF08002002	With push-button emergency override
ELT	0EF08002004	With "twist & push" emergency override
LT	XTAP510320	Unloading valve blanking plug

4 Coil

TYPE	CODE	DESCRIPTION
12VDC	4SLE001200A	**BER** type coil, ISO4400 conn., 12VDC

For complete available coil list see page 160.

5 Section threading

Only specify if it is different from **BSP** standard (see page 7).

6 Plugs *

CODE	DESCRIPTION
3XTAP838200	SAE16 plug, nr.1 for M4 and N2 section
3XTAP817130	SAE6 plug, nr.1 for Open Center sections

NOTE (*): Codes are referred to **UN-UNF** thread.

Inlet section part ordering codes

Valve setting (bar) — Priority valve stand-by (bar) — Steering max flow — Compensator stand-by (bar)

A **DPX160 / PF1A \ TGW3-175 \ VR5 - VP-D(1)-SB10-Q40 \ CF(1)-SB14 - SAE**

1 2 1 3 1 6

DPX160: Standard pressure valve

B **DPX160 / PS1A \ TGW3-175 \ VR5 - VP-D(1)-SB10-Q40 \ ESO32N - SAE - 12VDC**

1 2 1 3 4 5

PF1: Open Center

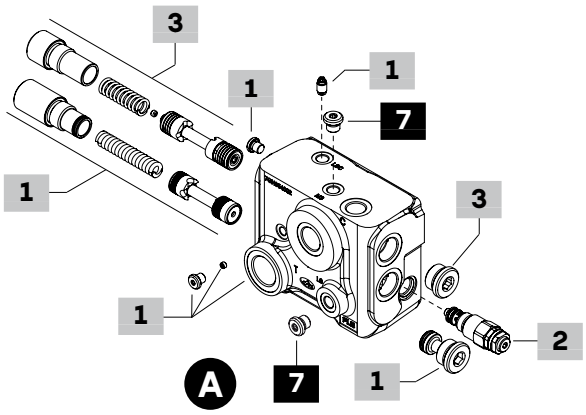

PS1: Closed Center

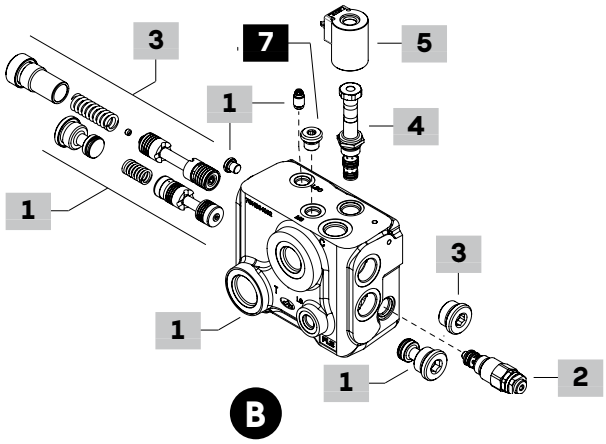

1 Inlet section kit * page 129

Following sections are suitable only for standard pressure valve

Open Center circuit

TYPE: **DPX160/PF1-SAE** CODE: YFIA105750S

DESCRIPTION: With compensator, P-T-LS-M3-C-LSC ports

Closed Center circuit

TYPE: **DPX160/PS1-SAE** CODE: YFIA105751S

DESCRIPTION: With shut-off spool, P-T-LS-M3-C-LSC ports

TYPE: **DPX160/PST1-SAE** CODE: YFIA105752S

DESCRIPTION: With shut-off blanking kit, P-T-LS-M3-C-LSC ports

2 Main pressure relief valve page 131

See previous page

3 Priority valve kit page 132

TYPE	CODE	DESCRIPTION
Regulated flow = 40 l/min *(10.5 US gpm)*		
D(1)-SB10-Q40	5CAS322100AV	Stand-by (margin pressure) 10 bar *(145 psi)*
D(1)-SB07-Q40	5CAS322100BV	Stand-by (margin pressure) 7 bar *(100 psi)*
D(1)-SB04-Q40	5CAS322100CV	Stand-by (margin pressure) 4 bar *(58 psi)*
Regulated flow = 20 l/min *(5.3 US gpm)*		
D(1)-SB10-Q20	5CAS323099AV	Stand-by (margin pressure) 10 bar *(145 psi)*
D(1)-SB07-Q20	5CAS323099BV	Stand-by (margin pressure) 7 bar *(100 psi)*
D(1)-SB04-Q20	5CAS323099CV	Stand-by (margin pressure) 4 bar *(58 psi)*

4 Solenoid operated shut-off valve page 132

TYPE	CODE	DESCRIPTION
ESO32A	0EJ08002035	Without emergency override
ESO32V	0EJ08002042	With screw type emergency override
EST	XTAP324540V	Valve blanking plug, only for PST inlet section

5 Coil

TYPE	CODE	DESCRIPTION
12VDC	4SL3000120	**BT** type coil, ISO4400 connector, 12VDC

For complete available coil list see page 160.

6 Section threading

Only specify if it is different from **BSP** standard (see page 7).

7 Plugs *

CODE	DESCRIPTION
3XTAP817130	SAE6 plug, nr.1 for PS section, nr.2 for PF section

NOTE (*): Codes are referred to **UN-UNF** thread.

Inlet section

Dimensions and hydraulic circuit

Example of M Open Center section

Type M4

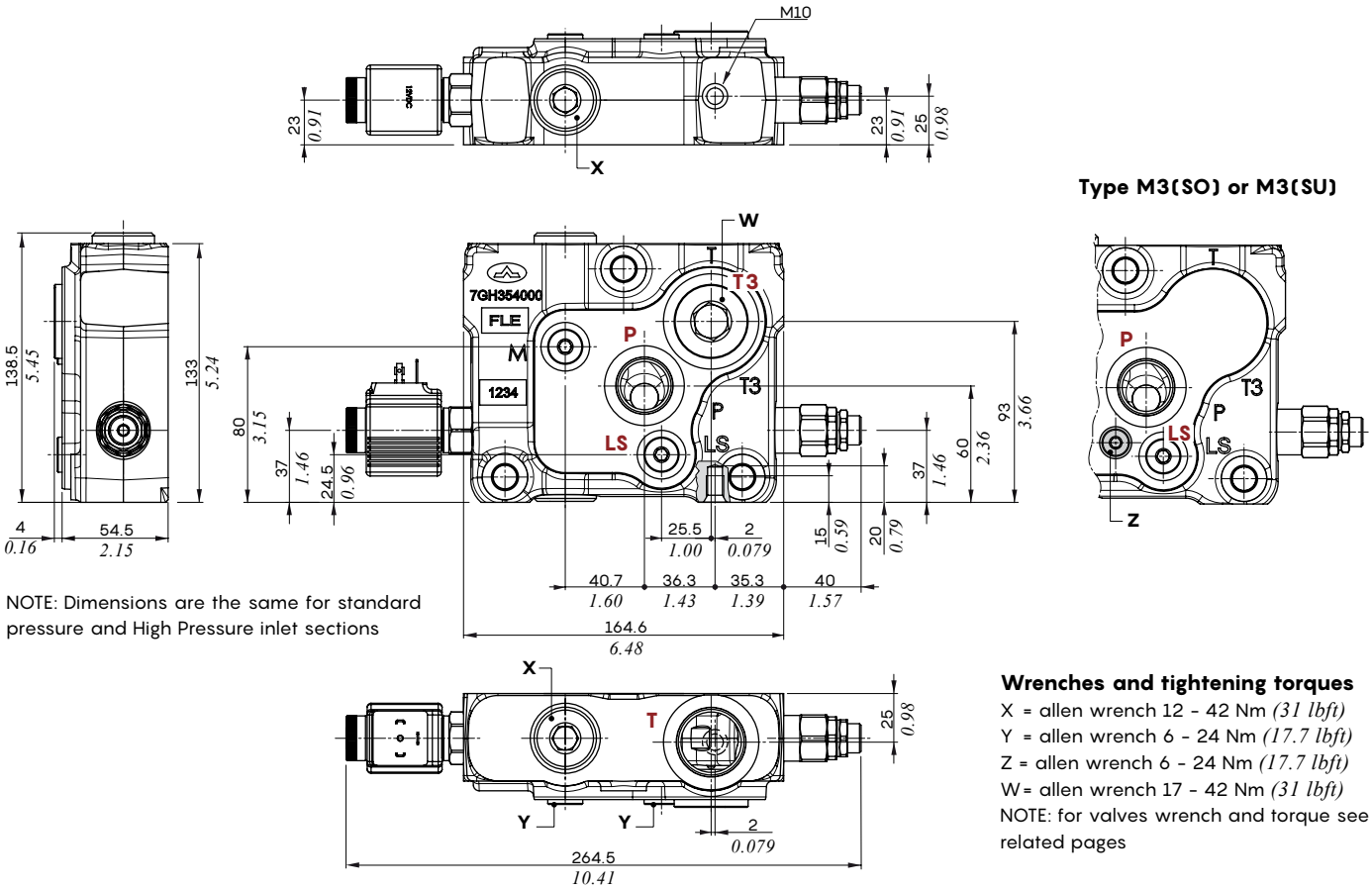

Type M3(SO) or M3(SU)

NOTE: Dimensions are the same for standard pressure and High Pressure inlet sections

Wrenches and tightening torques

X = allen wrench 12 - 42 Nm *(31 lbft)*
Y = allen wrench 6 - 24 Nm *(17.7 lbft)*
Z = allen wrench 6 - 24 Nm *(17.7 lbft)*
W = allen wrench 17 - 42 Nm *(31 lbft)*
NOTE: for valves wrench and torque see related pages

Type M3 **Type M3(SU)** **Type M3(SO)** **Type M4**

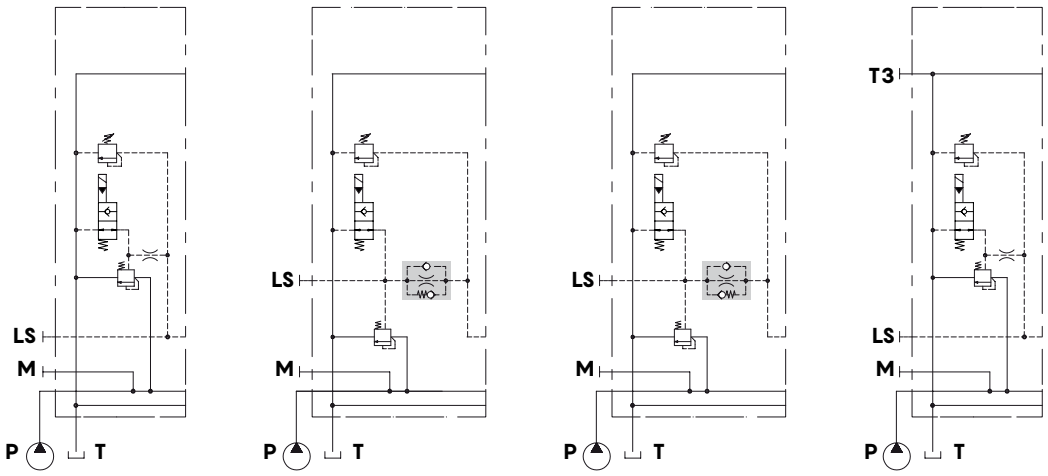

Inlet section

Dimensions and hydraulic circuit

Example of N Closed Center section

Type N2

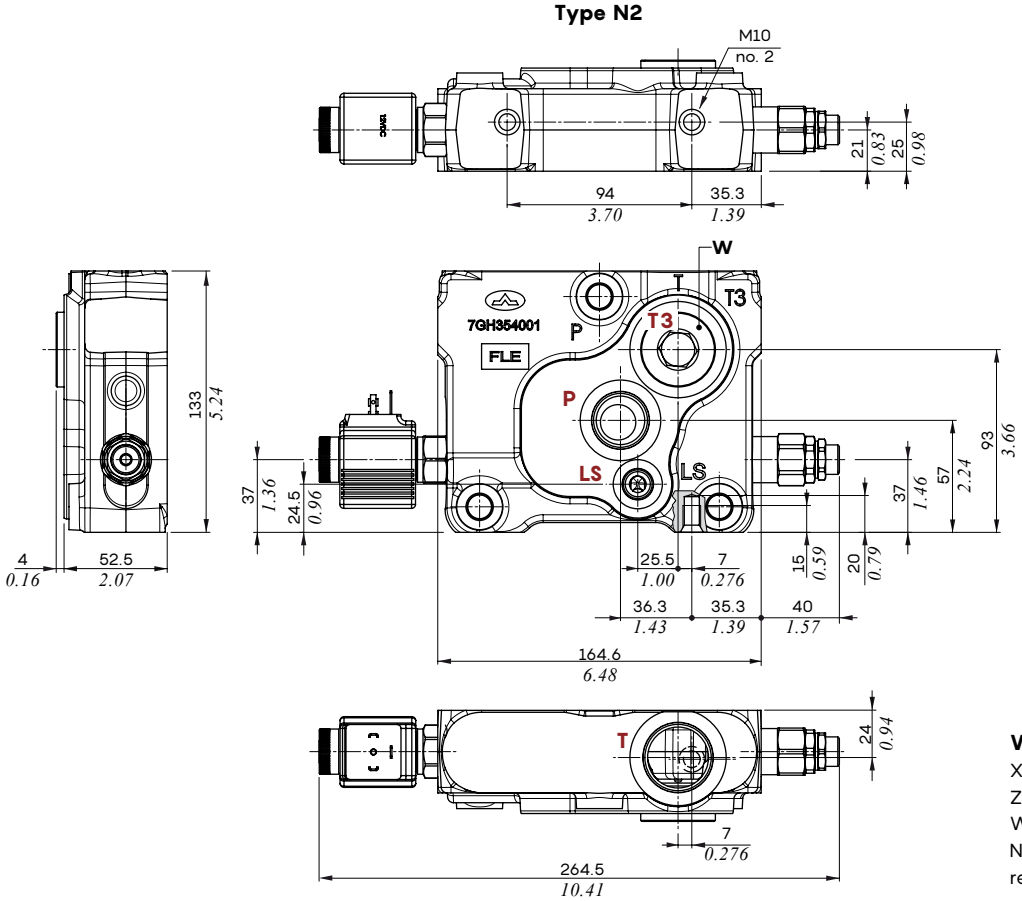

Type N1(SO) or N1(SU)

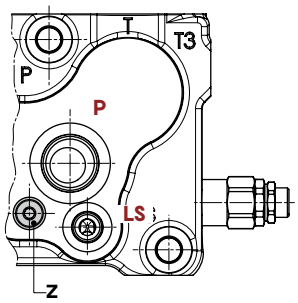

Wrenches and tightening torques

X = allen wrench 12 - 42 Nm *(31 lbft)*
Z = allen wrench 4 - 9.8 Nm *(7.2 lbft)*
W = allen wrench 17 - 42 Nm *(31 lbft)*
NOTE: for valves wrench and torque see related pages

Type N1

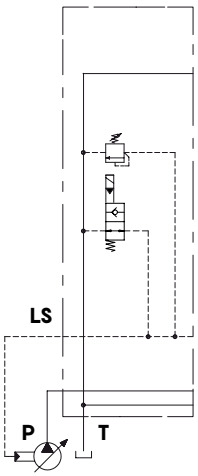

Type N1(SU)

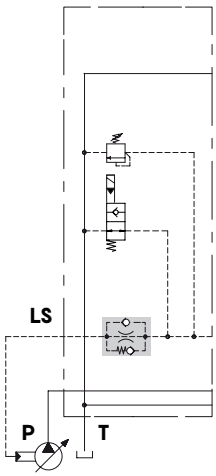

Type N1(SO)

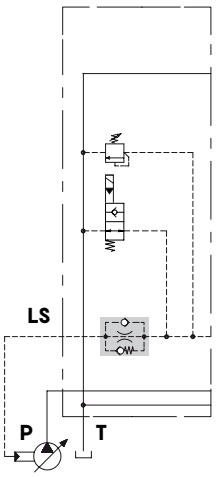

Type N2

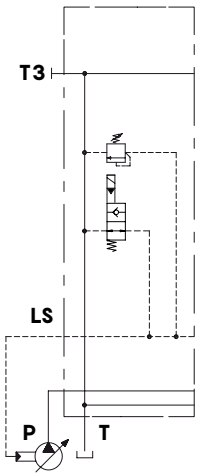

Dimensions and hydraulic circuit

PF1 Open Center section with priority valve

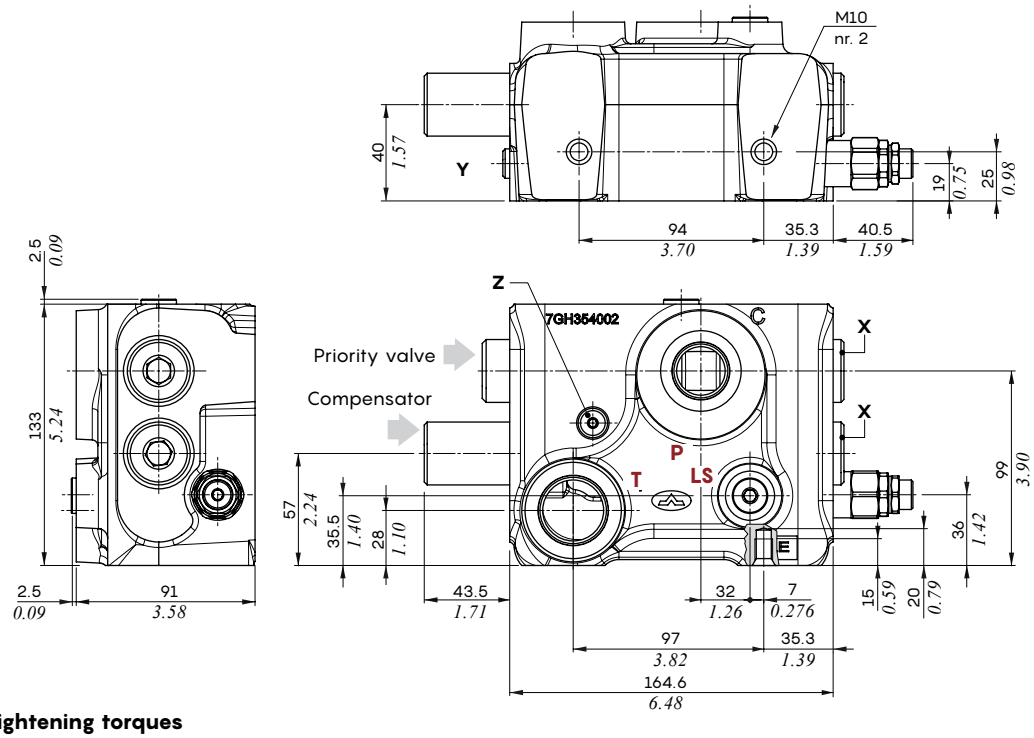

Wrenches and tightening torques

X = allen wrench 12 - 42 Nm *(31 lbft)*
Y = allen wrench 6 - 24 Nm *(17.7 lbft)*
Z = allen wrench 4 - 9.8 Nm *(7.2 lbft)*
NOTE: for valves wrench and torque see related pages

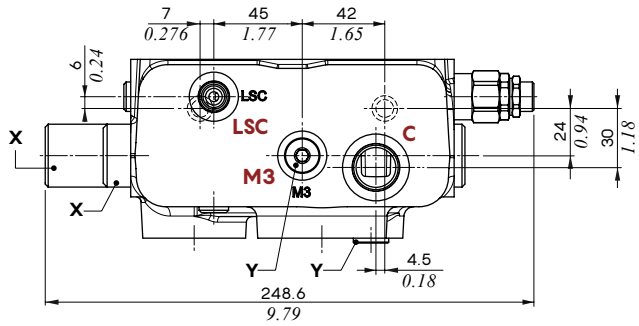

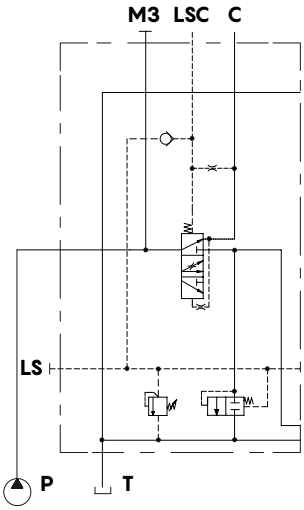

Inlet section

Dimensions and hydraulic circuit

PS1 Closed Center section with priority valve and shut-off

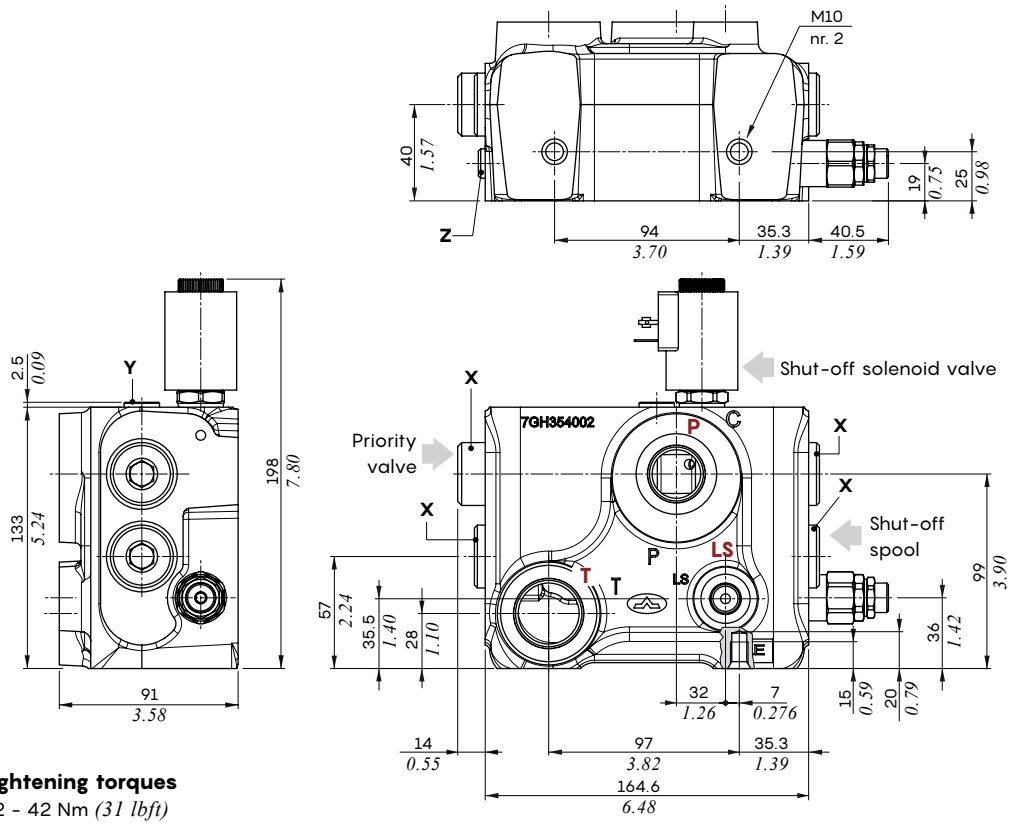

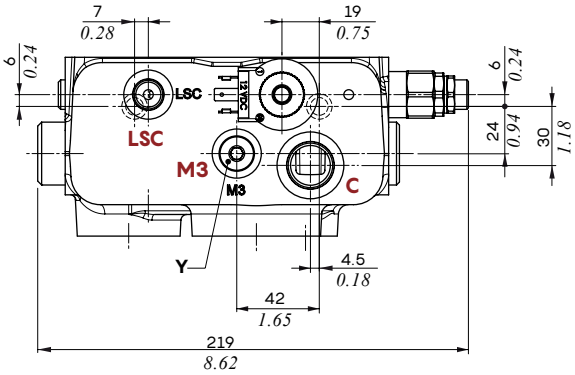

Wrenches and tightening torques

X = allen wrench 12 - 42 Nm *(31 lbft)*
Y = allen wrench 6 - 24 Nm *(17.7 lbft)*
Z = allen wrench 4 - 9.8 Nm *(7.2 lbft)*
NOTE: for valves wrench and torque see related pages

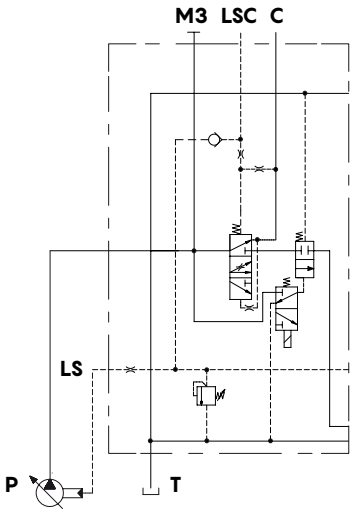

Inlet section

Main pressure relief valve

Setting types

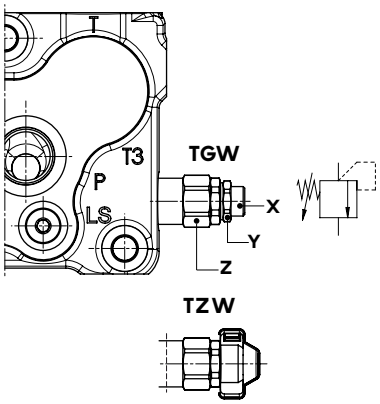

Setting range: type TGW2

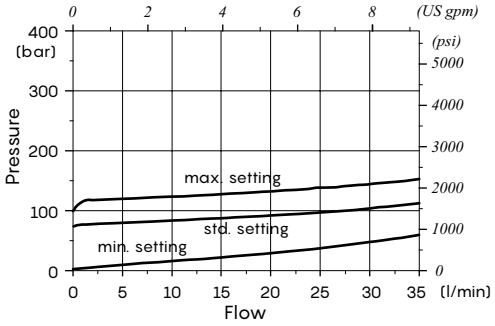

Setting range: type TGW3

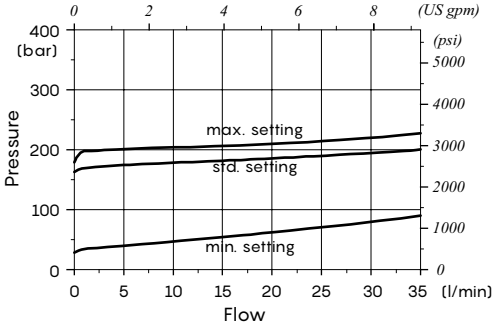

Setting range: type TGW4

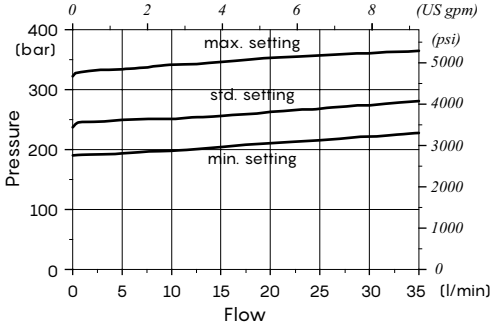

Setting range: type TGW5

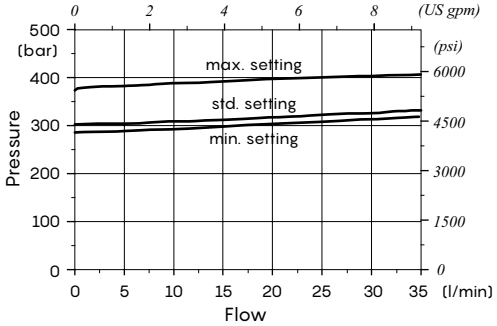

Legenda
TGW: free setting
TZW: set and locked valve
(cap code 4COP126301, n.2 pcs)
RAL3003 pigmented

Wrenches and tightening torques
X = allen wrench 5
Y = wrench 19 - 20 Nm *(14.7 lbft)*
Z = wrench 24 - 42 Nm *(31 lbft)*

Solenoid operated unloading valve

Manual emergency types

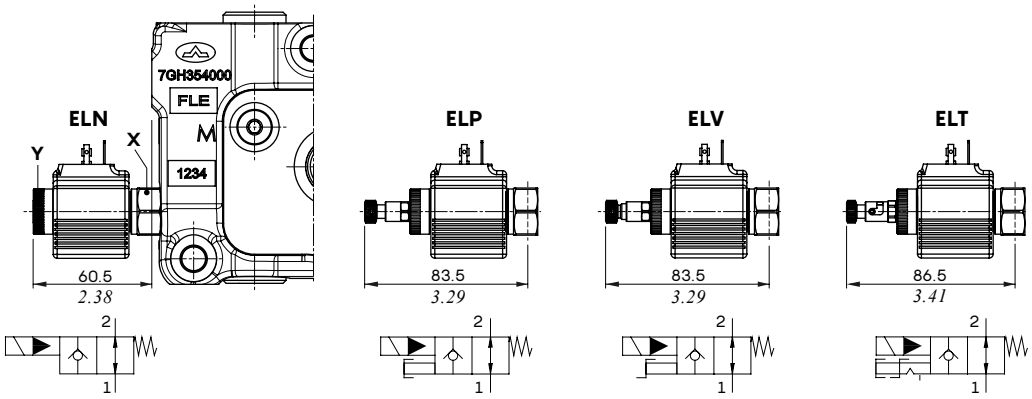

Legenda
ELN: without emergency
ELP: push button emergency override
ELV: screw emergency override
ELT: "push&twist" emergency override

Wrenches and tightening torques
X = wrench 24 - 30 Nm *(22 lbft)*
Y = manual tightening

Features
Max. flow..... : 40 l/min *(10.6 US gpm)*
Max. pressure ..... : 380 bar *(5500 psi)*
Internal leakage ..... : 0.25 cm³/min @ 210 bar
(0.015 in³/min @ 3050 psi)

For coil features and options see **BER** type coil at page 160.

Inlet section

Priority valve kit

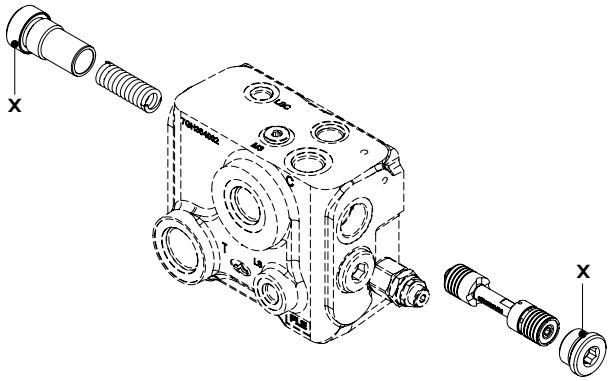

Wrenches and tightening torques
X = allen wrench 12 - 42 Nm *(31 lbft)*

Stand-by (margin pressure) vs. regulated flow
Regulated flow = 20 l/min *(5.3 US gpm)*

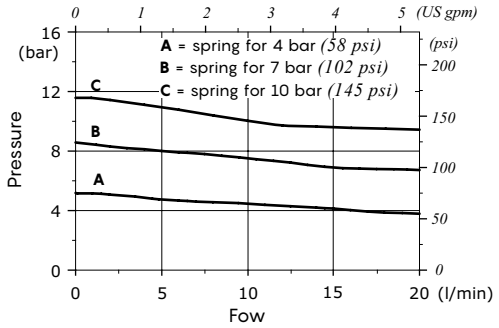

Stand-by (margin pressure) vs. regulated flow
Regulated flow = 40 l/min (*10.6 US gpm*)

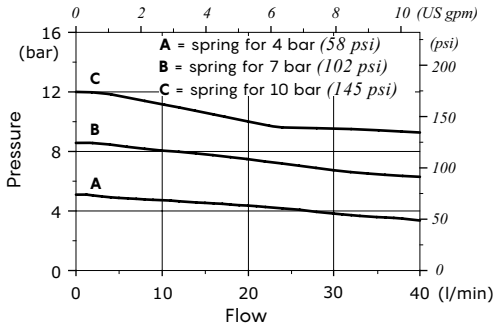

Shut-off solenoid valve

Manual emergency types

ESO32A

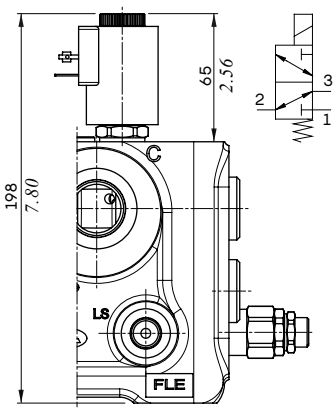

ESO32V

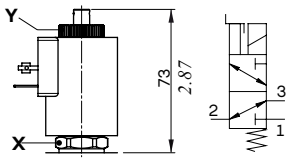

Legenda
ESO32A: without emergency
ESO32V: screw emergency override

Wrenches and tightening torques
X = wrench 24 - 30 Nm *(22 lbft)*
Y = manual tightening

Features
Max. flow. . . . . : 3 l/min *(0.796 US gpm)*
Max. pressure . . . . . : 350 bar *(5100 psi)*
Internal leakage . . . . . : 10 cm³/min @ 210 bar
(0.61 in³/min @ 3050 psi)

For coil features and options see **BT** type coil at page 160.

Working section parts ordering codes (mechanical, hydraulic)

A Mechanical control configuration:

flow on A/B ports (l/min)

Valve setting (bar) A port B port

DPX160 / P - 108(150/150) - 8 SLP . UL1(100) UL2(120) - SAE

1A 1B 3A 4 5 7 8

DPX160: Standard pressure section
DPX160HP: High Pressure section

B Proportional hydraulic control configuration:

DPX160 / Q - E108(150/150) - 8IMF3N - SAE

3B 6

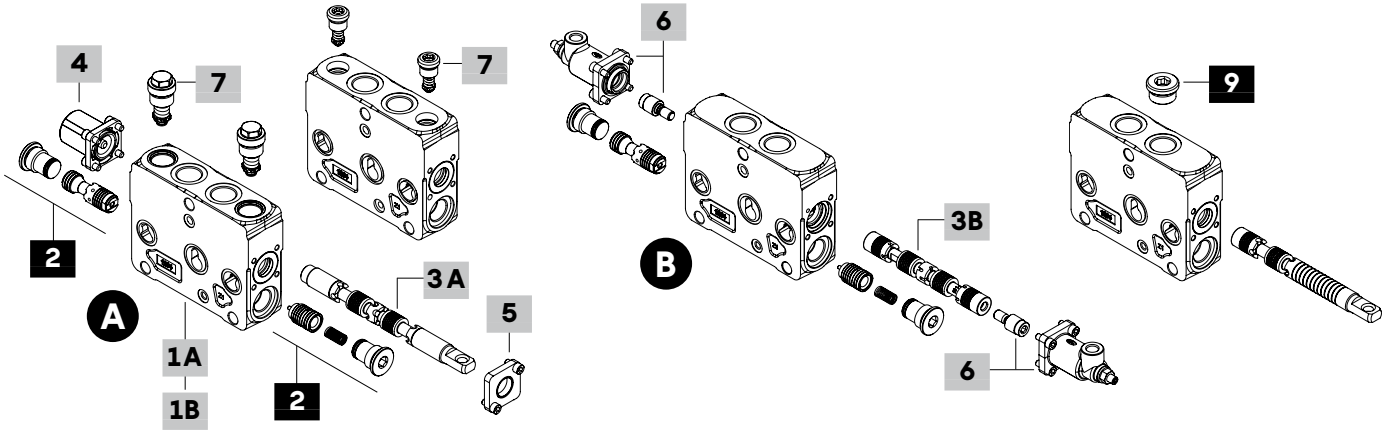

1A Std press. working section kit * page 137

For mechanical control

TYPE: **DPX160/Q-SAE-FPM** CODE: 5EL1057011V
DESCRIPTION: Without port valve arrangement
TYPE: **DPX160/P(UL)-SAE-FPM** CODE: 5EL1057000V
DESCRIPTION: With port pressure relief valve arrangement
TYPE: **DPX160/P(US)-SAE-FPM** CODE: 5EL1057001V
DESCRIPTION: With port antishock valve arrangement

For proportional hydraulic control

TYPE: **DPX160/Q-IM-SAE-FPM** CODE: 5EL1057011AV
DESCRIPTION: Without port valve arrangement
TYPE: **DPX160/P(UL)-IM-SAE-FPM** CODE: 5EL1057000AV
DESCRIPTION: With port pressure relief valve arrangement
TYPE: **DPX160/P(US)-IM-SAE-FPM** CODE: 5EL1057001AV
DESCRIPTION: With port antishock valve arrangement

1B High press. working section kit * page 137

For mechanical control

TYPE: **DPX160HP/Q-SAE-FPM** CODE: 5EL1057014V
DESCRIPTION: Without port valve arrangement
TYPE: **DPX160HP/P(UL)-SAE-FPM#** CODE: 5EL1057020V
DESCRIPTION: With port pressure relief valve arrangement
TYPE: **DPX160HP/P(US)-SAE-FPM** CODE: 5EL1057007V
DESCRIPTION: With port antishock valve arrangement

For proportional hydraulic control

TYPE: **DPX160HP/Q-IM-SAE-FPM** CODE: 5EL1057014AV
DESCRIPTION: Without port valve arrangement
TYPE: **DPX160HP/P(UL)-IM-SAE-FPM#** CODE: 5EL1057020AV
DESCRIPTION: With port pressure relief valve arrangement
TYPE: **DPX160HP/P(US)-IM-SAE-FPM** CODE: 5EL1057007AV
DESCRIPTION: With port antishock valve arrangement

NOTE (#): Max pressure = 380 bar *(4350 psi)*

2 Compensator kit

TYPE	CODE	DESCRIPTION
-	5CAS321061V	Compensator

NOTE (*): Codes are referred to **UN-UNF** thread.

3A Spool for mechanical control page 138

Flow is referred to 14 bar *(200 psi)* stand-by (margin pressure)

TYPE	CODE	DESCRIPTION
Double acting with A and B closed in neutral position		
108(150)	3CU8110108	150 l/min *(39.5 US gpm)* flow
107(130)	3CU8110107	130 l/min *(34.3 US gpm)* flow
106(110)	3CU8110106	110 l/min *(29 US gpm)* flow
105(90)	3CU8110105	90 l/min *(23.8 US gpm)* flow
104(70)	3CU8110104	70 l/min *(18.5 US gpm)* flow
103(50)	3CU8110103	50 l/min *(13.2 US gpm)* flow
102(30)	3CU8110102	30 l/min *(7.9 US gpm)* flow
109(20)	3CU8110109	20 l/min *(5.3 US gpm)* flow
101(10)	3CU8110101	10 l/min *(2.6 US gpm)* flow
Double acting with A and B to tank in neutral position		
208(150)	3CU8110208	150 l/min *(39.5 US gpm)* flow
Double acting with A and B partially to tank in neutral position		
2H08(150)	3CU8110209	150 l/min *(39.5 US gpm)* flow
2H07(130)	3CU8110223	130 l/min *(34.3 US gpm)* flow
2H06(110)	3CU8110222	110 l/min *(29 US gpm)* flow
2H05(90)	3CU8110224	90 l/min *(23.8 US gpm)* flow
2H04(70)	3CU8110221	70 l/min *(18.5 US gpm)* flow
2H03(50)	3CU8110220	50 l/min *(13.2 US gpm)* flow
2H02(30)	3CU8110219	30 l/min *(7.9 US gpm)* flow
2H09(20)	3CU8110218	20 l/min *(5.3 US gpm)* flow
2H01(10)	3CU8110217	10 l/min *(2.6 US gpm)* flow
Single acting on A, B plugged: SAE12 plug is required		
308(150)	3CU8110308	150 l/min *(39.5 US gpm)* flow
306(110)	3CU8110306	110 l/min *(29 US gpm)* flow
303(50)	3CU8110303	50 l/min *(13.2 US gpm)* flow
309(20)	3CU8110309	20 l/min *(5.3 US gpm)* flow
Single acting on B, A plugged: SAE12 plug is required		
408(150)	3CU8110408	150 l/min *(39.5 US gpm)* flow
406(110)	3CU8110406	110 l/min *(29 US gpm)* flow
403(50)	3CU8110403	50 l/min *(13.2 US gpm)* flow
409(20)	3CU8110409	20 l/min *(5.3 US gpm)* flow
Double acting with A and B closed in neutral pos., 4 positions, floating in 4th position with spool in: 13 type positioner is required		
508(150)	3CU8110508	150 l/min *(39.5 US gpm)* flow
504(70)	3CU8110504	70 l/min *(18.5 US gpm)* flow

Working section part ordering codes (mechanical, hydraulic)

3B Spool for hydraulic control page 138

Flow is referred to 14 bar *(200 psi)* stand-by (margin pressure)

TYPE	CODE	DESCRIPTION
Double acting with A and B closed in neutral position		
E108(150)	3CU871E108	150 l/min *(39.5 US gpm)* flow
E107(130)	3CU871E107	130 l/min *(34.3 US gpm)* flow
E106(110)	3CU871E106	110 l/min *(29 US gpm)* flow
E105(90)	3CU871E105	90 l/min *(23.8 US gpm)* flow
E104(70)	3CU871E104	70 l/min *(18.5 US gpm)* flow
E103(50)	3CU871E103	50 l/min *(13.2 US gpm)* flow
E102(30)	3CU871E102	30 l/min *(7.9 US gpm)* flow
E113(20)	3CU871E113	20 l/min *(5.3 US gpm)* flow
E101(10)	3CU871E101	10 l/min *(2.6 US gpm)* flow
Double acting with A and B to tank in neutral position		
E208(150)	3CU871E208	150 l/min *(39.5 US gpm)* flow
E213(100)	3CU871E213	100 l/min *(26.4 US gpm)* flow
E212(80)	3CU871E212	80 l/min *(21 US gpm)* flow
E203(50)	3CU871E203	50 l/min *(13.2 US gpm)* flow
Double acting with A and B partially to tank in neutral position		
E2H08(150)	3CU871E209	150 l/min *(39.5 US gpm)* flow
E2H07(130)	3CU871E223	130 l/min *(34.3 US gpm)* flow
E2H06(110)	3CU871E222	110 l/min *(29 US gpm)* flow
E2H05(90)	3CU871E215	90 l/min *(23.8 US gpm)* flow
E2H04(70)	3CU871E221	70 l/min *(18.5 US gpm)* flow
E2H03(50)	3CU871E220	50 l/min *(13.2 US gpm)* flow
E2H02(30)	3CU871E219	30 l/min *(7.9 US gpm)* flow
E2H13(20)	3CU871E218	20 l/min *(5.3 US gpm)* flow
E2H01(10)	3CU871E217	10 l/min *(2.6 US gpm)* flow
Single acting on A or B, other port plugged: SAE12 plug is required		
E308-E408(150)	3CU871E308	150 l/min *(39.5 US gpm)* flow
E306-E406(110)	3CU871E306	110 l/min *(29 US gpm)* flow
E303-E403(50)	3CU871E303	50 l/min *(13.2 US gpm)* flow
E313-E413(20)	3CU871E313	20 l/min *(5.3 US gpm)* flow
Double acting with A and B closed in neutral pos., 4 positions, floating in 4th pos. with spool in: 13IM type control is required		
I508(150)	YCU871E508	150 l/min *(39.5 US gpm)* flow
I507(130)	YCU871E507	130 l/min *(34.3 US gpm)* flow
I504(70)	YCU871E504	70 l/min *(18.5 US gpm)* flow

NOTE: to order these spools as spare parts
it's necessary to order nr. 2 pins code 3VIT116360.
This rule is not required for floating spools

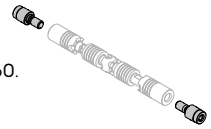

4 "A" side spool positioners page 140

TYPE	CODE	DESCRIPTION
7FTNA	5V07210101	With friction and neutral pos. notch
8MD	5V08109000	3 postions with spring return to neutral position
For floating circuit (spool 5)		
13	5V13109000	4 positions, detent in 4th position with spring return to neutral position

5 "B" side spool control kit page 141

TYPE	CODE	DESCRIPTION
L	5LEV110000	Standard lever box
LFG	5LEV110700	Lever box with spool stroke limiter on both ports
SLP	5COP110000	Without lever with dust-proof plate
TQ	5TEL110110	Flexible cable connection
LCB	5CLO216100	Joystick for 2 section operation

6 Proportional hydraulic control * page 143

TYPE	CODE	DESCRIPTION
8IMNOH-SAE	5IDR209704V-H	Range 8-28 bar *(116-406 psi)*
8IMNOHF3-SAE	5IDR209705V-H	As previous with spool stroke limiter
For floating circuit (spool I5)		
13IM-SAE	5IDR209703V	Range 3.1-25.6 / 0-30 bar *(45-371 / 0-435 psi)*
13IMP-SAE	5IDR209714V	Range 2-17 / 2-30 bar *(29-247 / 29-435 psi)*

7 Port valves page 153

TYPE	CODE	DESCRIPTION
"US" size valves		
To be used with a setting pressure higher than the main overpressure valve; if used with a lower setting pressure, the spool flow rate is limited to 60 l/min *(15.8 US gpm)*.		
UST	XTAP221340V	Valve blanking plug
CS	5KIT426270	Anticavitation valve (for US cavity)

Fixed setting antishock and anticavitation valves with pressure relief function: setting is referred to 10 l/min *(2.6 US gpm)*

TYPE: **US (100)** CODE: 5KIT326 100
└ setting (bar) └ setting (bar)

SETTING:

25 bar *(360 psi)*	40 bar *(725 psi)*	50 bar *(725 psi)*	60 bar *(870 psi)*
70 bar *(1010 psi)*	80 bar *(1150 psi)*	90 bar *(1300 psi)*	100 bar *(1450 psi)*
125 bar *(1800 psi)*	140 bar *(2050 psi)*	160 bar *(2300 psi)*	175 bar *(2550 psi)*
190 bar *(2750 psi)*	210 bar *(3050 psi)*	230 bar *(3350 psi)*	240 bar *(3500 psi)*
250 bar *(3600 psi)*	260 bar *(3750 psi)*	280 bar *(4050 psi)*	300 bar *(4350 psi)*
320 bar *(4650 psi)*	340 bar *(4950 psi)*	360 bar *(5200 psi)*	380 bar *(5500 psi)*
400 bar *(5800 psi)*	420 bar *(6100 psi)*		

"UL" size valves		
ULT	XTAP528520V	Valve blanking plug
CL	5KIT409000	Anticavitation valve (for UL cavity)

Fixed setting pressure relief valves: setting is referred to 5 l/min *(1.3 US gpm)*

TYPE: **UL (100)** CODE: 5KIT340 100 L
└ setting (bar) └ setting (bar)

SETTING:

50 bar *(725 psi)*	70 bar *(1010 psi)*	80 bar *(1150 psi)*	100 bar *(1450 psi)*
120 bar *(1750 psi)*	130 bar *(1900 psi)*	140 bar *(2050 psi)*	150 bar *(2150 psi)*
160 bar *(2300 psi)*	170 bar *(2450 psi)*	180 bar *(2600 psi)*	190 bar *(2750 psi)*
200 bar *(2900 psi)*	210 bar *(3050 psi)*	220 bar *(3200 psi)*	250 bar *(3600 psi)*
270 bar *(3900 psi)*	300 bar *(4350 psi)*	320 bar *(4650 psi)*	350 bar *(5050 psi)*
370 bar *(5350 psi)*	380 bar *(5500 psi)*		

8 Section threading

Only specify if it is different from **BSP** standard (see page 7).

9 Plug for single acting spool *

CODE	DESCRIPTION
3XTAP832200	SAE12 plug

NOTE (*): Codes are referred to **UN-UNF** thread.

Working section parts ordering codes (electrohydraulic)

A Two-side electrohydraulic control configuration:

flow on A/B ports (l/min) — Valve setting (bar): A port, B port

DPX160 / PE - E108(150/150) - 8EB3F3 . UL1(100) UL2(120) - SAE - 12VDC

1A 1B 3 4 7 8 4

DPX160: Standard pressure section
DPX160HP: High Pressure section

B One-side electrohydraulic control configuration:

DPX160 / QZ - E108(150/150) - 8EZ3 LQF3 - SAE - 12VDC

5 6 5

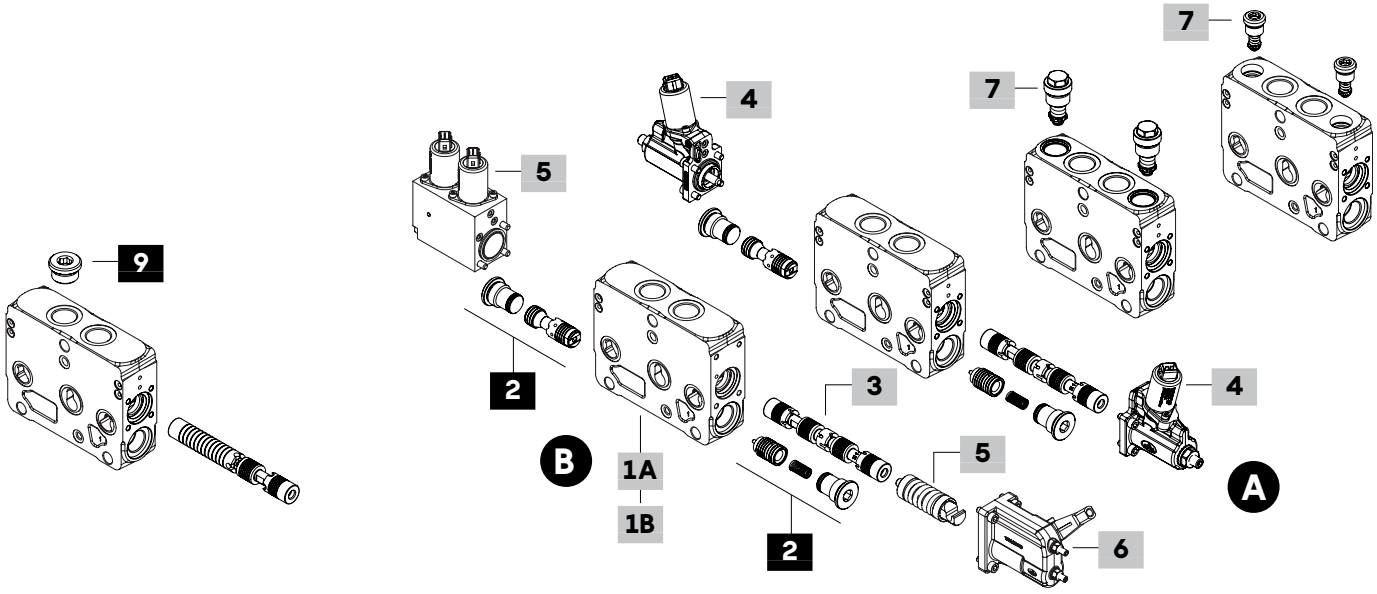

1A Std press. working section kit * page 137

For two-side electrohydraulic control

TYPE: **DPX160/QE-SAE-FPM** CODE: 5EL1057010V
DESCRIPTION: Without port valve arrangement
TYPE: **DPX160/PE(UL)-SAE-FPM** CODE: 5EL1057002V
DESCRIPTION: With port pressure relief valve arrangement
TYPE: **DPX160/PE(US)-SAE-FPM** CODE: 5EL1057003V
DESCRIPTION: With port antishock valve arrangement

For one-side electrohydraulic control

TYPE: **DPX160/QZ-SAE-FPM** CODE: 5EL1057017V
DESCRIPTION: Without port valve arrangement
TYPE: **DPX160/PZ(UL)-SAE-FPM** CODE: 5EL1057016V
DESCRIPTION: With port pressure relief valve arrangement
TYPE: **DPX160/PZ(US)-SAE-FPM** CODE: 5EL1057018V
DESCRIPTION: With port antishock valve arrangement

1B High press. working section kit * page 137

For two-side electrohydraulic control

TYPE: **DPX160HP/QE-SAE-FPM** CODE: 5EL1057015V
DESCRIPTION: Without port valve arrangement
TYPE: **DPX160HP/PE(UL)-SAE-FPM#** CODE: 5EL1057021V
DESCRIPTION: With port pressure relief valve arrangement
TYPE: **DPX160HP/PE(US)-SAE-FPM** CODE: 5EL1057008V
DESCRIPTION: With port antishock valve arrangement

For one-side electrohydraulic control

TYPE: **DPX160HP/QZ-SAE-FPM** CODE: 5EL1057031V
DESCRIPTION: Without port valve arrangement
TYPE: **DPX160HP/PZ(UL)-SAE-FPM#** CODE: 5EL1057032V
DESCRIPTION: With port pressure relief valve arrangement
TYPE: **DPX160HP/PZ(US)-SAE-FPM** CODE: 5EL1057033V
DESCRIPTION: With port antishock valve arrangement

NOTE (#): Max pressure = 380 bar *(4350 psi)*

2 Compensator kit

TYPE	CODE	DESCRIPTION
-	5CAS321061V	Compensator, FPM o-ring seal

NOTE (*): Codes are referred to **UN-UNF** thread.

Working section part ordering codes (electrohydraulic)

3 Spool page 138

Flow is referred to 14 bar *(200 psi)* stand-by (margin pressure)

TYPE	CODE	DESCRIPTION
Double acting with A and B closed in neutral position		
E108(150)	3CU871E108	150 l/min *(39.5 US gpm)* flow
E107(130)	3CU871E107	130 l/min *(34.3 US gpm)* flow
E106(110)	3CU871E106	110 l/min *(29 US gpm)* flow
E105(90)	3CU871E105	90 l/min *(23.8 US gpm)* flow
E104(70)	3CU871E104	70 l/min *(18.5 US gpm)* flow
E103(50)	3CU871E103	50 l/min *(13.2 US gpm)* flow
E102(30)	3CU871E102	30 l/min *(7.9 US gpm)* flow
E113(20)	3CU871E113	20 l/min *(5.3 US gpm)* flow
E101(10)	3CU871E101	10 l/min *(2.6 US gpm)* flow
Double acting with A and B to tank in neutral position		
E208(150)	3CU871E208	150 l/min *(39.5 US gpm)* flow
E213(100)	3CU871E213	100 l/min *(26.4 US gpm)* flow
E212(80)	3CU871E212	80 l/min *(21 US gpm)* flow
E203(50)	3CU871E203	50 l/min *(13.2 US gpm)* flow
Double acting with A and B partially to tank in neutral position		
E2H08(150)	3CU871E209	150 l/min *(39.5 US gpm)* flow
E2H07(130)	3CU871E223	130 l/min *(34.3 US gpm)* flow
E2H06(110)	3CU871E222	110 l/min *(29 US gpm)* flow
E2H05(90)	3CU871E215	90 l/min *(23.8 US gpm)* flow
E2H04(70)	3CU871E221	70 l/min *(18.5 US gpm)* flow
E2H03(50)	3CU871E220	50 l/min *(13.2 US gpm)* flow
E2H02(30)	3CU871E219	30 l/min *(7.9 US gpm)* flow
E2H13(20)	3CU871E218	20 l/min *(5.3 US gpm)* flow
E2H01(10)	3CU871E217	10 l/min *(2.6 US gpm)* flow
Single acting on A or B, other port plugged: SAE12 plug is required		
E308-E408(150)	3CU871E308	150 l/min *(39.5 US gpm)* flow
E306-E406(110)	3CU871E306	110 l/min *(29 US gpm)* flow
E303-E403(50)	3CU871E303	50 l/min *(13.2 US gpm)* flow
E313-E413(20)	3CU871E313	20 l/min *(5.3 US gpm)* flow
Double acting with A and B closed in neutral pos., 4 positions, floating in 4th pos. with spool in: needs control kit type 13EB3.../13EZ3...		
E508(150)	3CU871E508	150 l/min *(39.5 US gpm)* flow
E507(130)	3CU871E507	130 l/min *(34.3 US gpm)* flow
E504(70)	3CU871E504	70 l/min *(18.5 US gpm)* flow

7 Port valves page 153

TYPE	CODE	DESCRIPTION
Pressure relief valves		
UL(50)	5KIT340050L	Setting 50 bar *(725 psi)*
Antishock valves		
US(25)	5KIT326025	Setting 25 bar *(360 psi)*

For complete list see previous pages.

8 Section threading

Only specify if it is different from **BSP** standard (see page 7).

9 Plug for single acting spool*

CODE	DESCRIPTION
3XTAP832200	SAE12 plug

4 Two-side electrohydr. control page 148

TYPE	CODE	DESCRIPTION
Without lever control		
8EB3-12VDC	5IDR909312V	With AMP connector
8EB3-24VDC	5IDR909324V	As previous one
8EB34-12VDC	5IDR909329V	With Deutsch connector
8EB34-24VDC	5IDR909330V	As previous one
8EB3F3-12VDC	5IDR909313V	With AMP connector with spool stroke limiter
8EB3F3-24VDC	5IDR909317V	As previous one
8EB34F3-12VDC	5IDR909314V	With Deutsch connector with spool stroke limiter
8EB34F3-24VDC	5IDR909331V	As previous one
Without lever control: for floating circuit (E5 spool)		
13EB3-12VDC	5IDR919312V	With AMP connector
13EB3-24VDC	5IDR919324V	As previous one
13EB34-12VDC	5IDR919317V	With Deutsch connector
13EB34-24VDC	5IDR919318V	As previous one
With lever control		
8EB3LH-12VDC	5IDR909315AV	With AMP connector
8EB3LH-24VDC	5IDR909326AV	As previous one
8EB34LH-12VDC	5IDR909332AV	With Deutsch connector
8EB34LH-24VDC	5IDR909333AV	As previous one
8EB3LHF3-12VDC	5IDR909355V	With AMP connector with spool stroke limiter
8EB3LHF3-24VDC	5IDR909354V	As previous one
8EB34LHF3-12VDC	5IDR909334AV	With Deutsch connector with spool stroke limiter
8EB34LHF3-24VDC	5IDR909335AV	As previous one
With lever control and spool position sensor		
8EB3LHSPSD-12VDC	5IDR909341V	AMP conn. and digital sensor
8EB3LHSPSD-24VDC	5IDR909338AV	As previous one
8EB3LHF3SPSD-12VDC	5IDR909339V	AMP conn., digital sensor and spool stroke limiter
8EB3LHF3SPSD-24VDC	5IDR909336AV	As previous one
With lever control: for floating circuit (E5 spool)		
13EB3LH-12VDC	5IDR919313AV	With AMP connector
13EB3LH-24VDC	5IDR919325AV	As previous one
13EB34LH-12VDC	5IDR919319V	With Deutsch connector
13EB34LH-24VDC	5IDR919320V	As previous one
13EB3LHF3-12VDC	5IDR919314V	With AMP connector with spool stroke limiter
13EB3LHF3-24VDC	5IDR919326AV	As previous one
13EB34LHF3-12VDC	5IDR919321AV	With Deutsch connector with spool stroke limiter
13EB34LHF3-24VDC	5IDR919322V	As previous one

5 One-side electrohydr.control; "A" side page 151

These controls must be coupled with "B" side options

TYPE	CODE	DESCRIPTION
8EZ3-12VDC	5IDR609315V	With AMP connector
8EZ3-24VDC	5IDR609316V	As previous one
8EZ34-12VDC	5IDR609317V	With Deutsch connector
8EZ34-24VDC	5IDR609318V	As previous one
With spool position sensor		
8EZ34SPSL-0.5(A)-4.5(B)-12VDC	5IDR609313V	Deutsch conn. and analog sensor
With lever control: for floating circuit (spool E5)		
13EZ3-12VDC	5IDR619300V	With AMP connector
13EZ3-24VDC	5IDR619302V	As previous one
13EZ34-12VDC	5IDR619301V	With Deutsch connector
13EZ34-24VDC	5IDR619303V	As previous one

6 One-side electrohydr.option; "B" side" page 152

These options must be coupled with "A" side controls

TYPE	CODE	DESCRIPTION
LQ	5LEV160700AV	Lever box
LQF3	5LEV160701AV	Lever box with spool stroke limiter
SLCQ	5COP260000V	Without lever with endcap

NOTE (*): Codes are referred to **UN-UNF** thread.

Working section

Dimensions and hydraulic circuit

Section for mechanical and proportional hydraulic controls

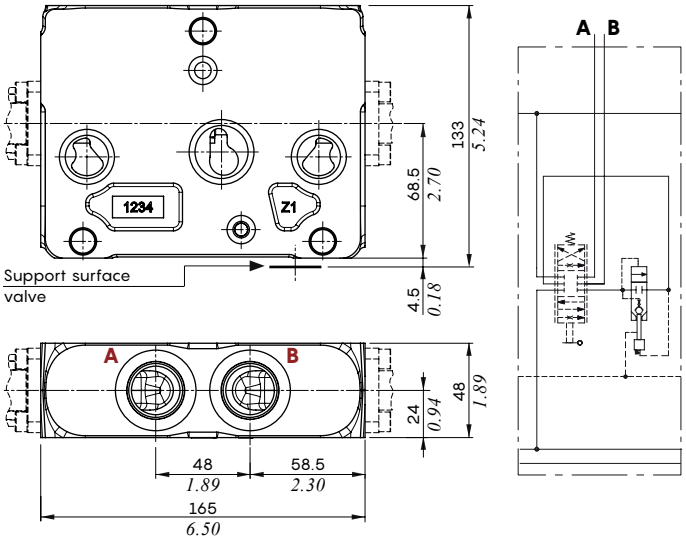

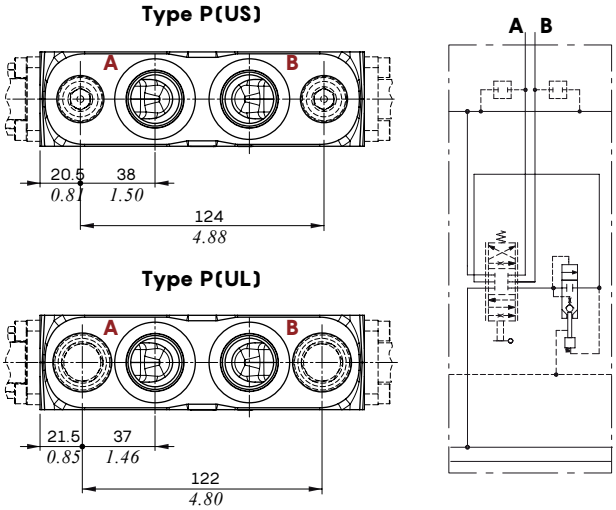

NOTE: US and UL auxiliary valves are not interchangeable: they need dedicated working sections

Section for two-side electrohydraulic control

Type QE, PE(US) or PE(UL)

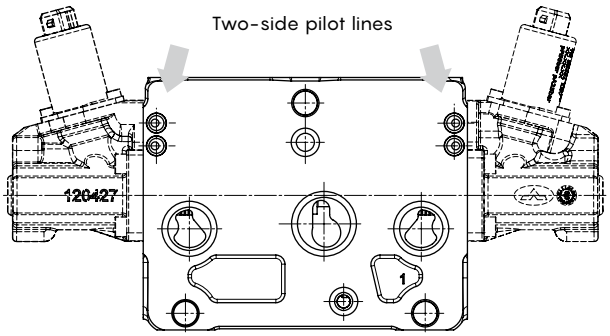

Type QE

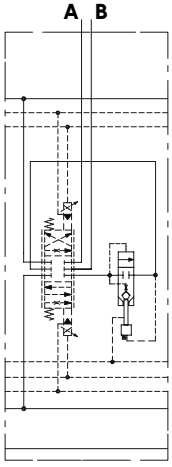

Type PE

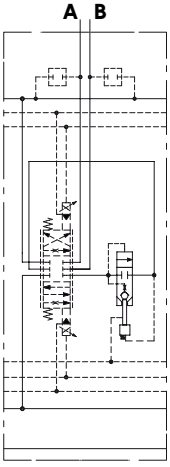

Section for one-side electrohydraulic control

Type QZ, PZ(US) or PZ(UL)

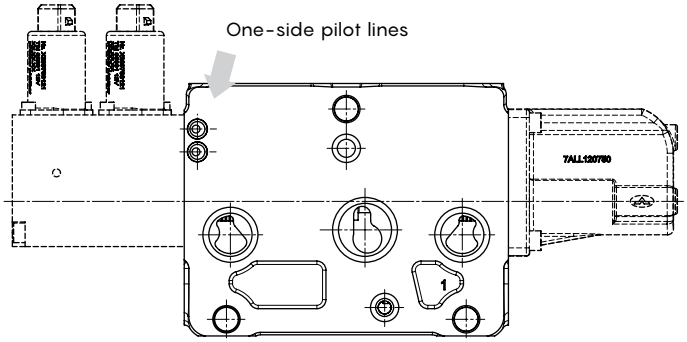

Type QZ

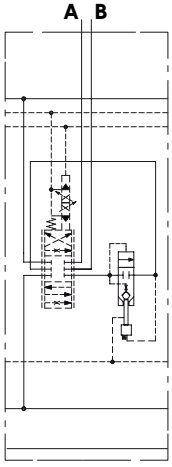

Type PZ

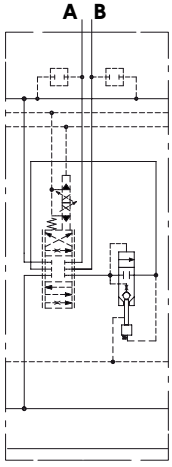

Working section

Spool

Type 1 (1../E1..)
A, B closed in neutral position

1 **0** 2

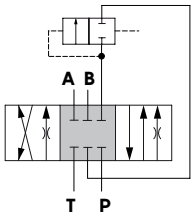

Stroke
position 1: + 8 mm *(+ 0.31 in)*
position 2: - 8 mm *(- 0.31 in)*

Type 2(2../E2..)
A, B to tank in neutral position

1 **0** 2

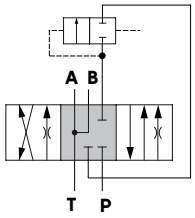

Stroke
position 1: + 8 mm *(+ 0.31 in)*
position 2: - 8 mm *(- 0.31 in)*

Type 2H(2H../E2H..)
A, B partially to tank in neutral position

1 **0** 2

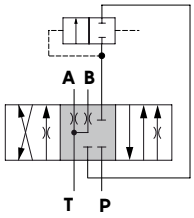

Stroke
position 1: + 8 mm *(+ 0.31 in)*
position 2: - 8 mm *(- 0.31 in)*

Type 3 (3../E3..)
Single acting on A

1 **0** 2

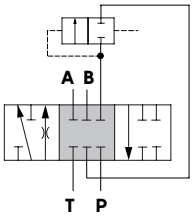

Stroke
position 1: + 8 mm *(+ 0.31 in)*
position 2: - 8 mm *(- 0.31 in)*

Type 4 (4../E4..)
Single acting on B

1 **0** 2

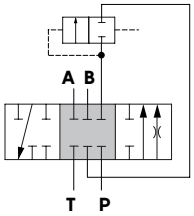

Stroke
position 1: + 8 mm *(+ 0.31 in)*
position 2: - 8 mm *(- 0.31 in)*

Type 5 (5../E5../I5..)
Floating in 4th position (pos.3)

1 **0** 2 3

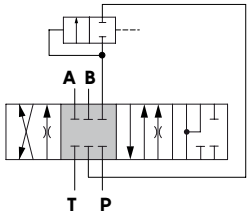

Stroke
position 1: + 8 mm *(+ 0.31 in)*
position 2: - 8 mm *(- 0.31 in)*
position 3: - 13 mm *(- 0.51 in)*

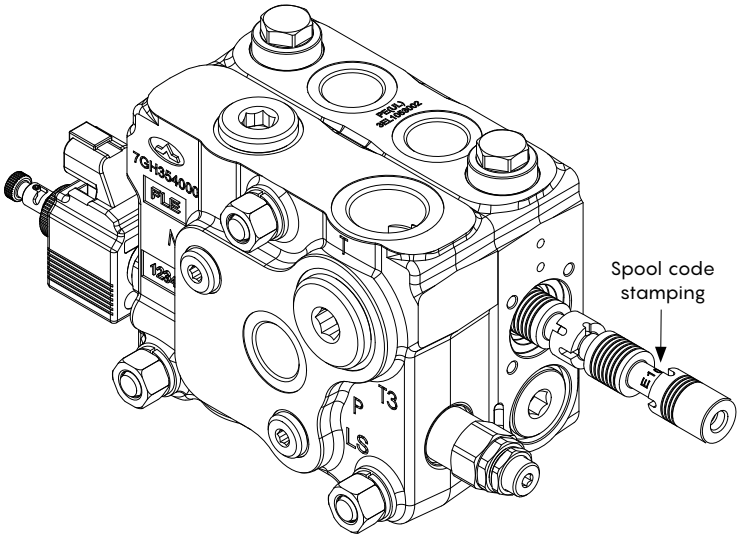

In case of spool replacement the code stamping must be oriented toward B port.

Spool flow vs. Stand-by pressure (margin pressure)

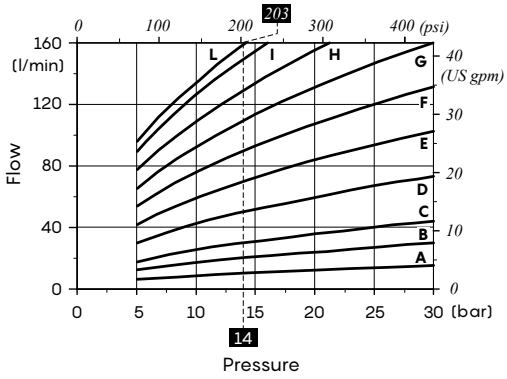

Curves with spool nominal flow @ 14 bar *(200 psi)* **stand-by (margin pressure)**

A = 10 l/min *(2.6 US gpm)* ± 10%
B = 20 l/min *(5.3 US gpm)* ± 10%
C = 30 l/min *(7.9 US gpm)* ± 10%
D = 50 l/min *(13.2 US gpm)* ± 10%
E = 70 l/min *(18.5 US gpm)* ± 10%
F = 90 l/min *(23.8 US gpm)* ± 10%
G = 110 l/min *(29.0 US gpm)* ± 10%
H = 130 l/min *(34.3 US gpm)* ± 10%
I = 150 l/min *(39.5 US gpm)* ± 10%
L = 160 l/min *(42.3 US gpm)* ± 10%

Working section

Spool

Following curves are detected with standard spools, connecting P⇒A⇒B⇒T and P⇒B⇒A⇒T ports without flow multiplication. Customized spools with backpressure or flow multiplication may require different force, pressure and pilot current for operation.

3 position spool metering curve

Qin = 160 l/min - *(42.3 US gpm)* - Open center circuit

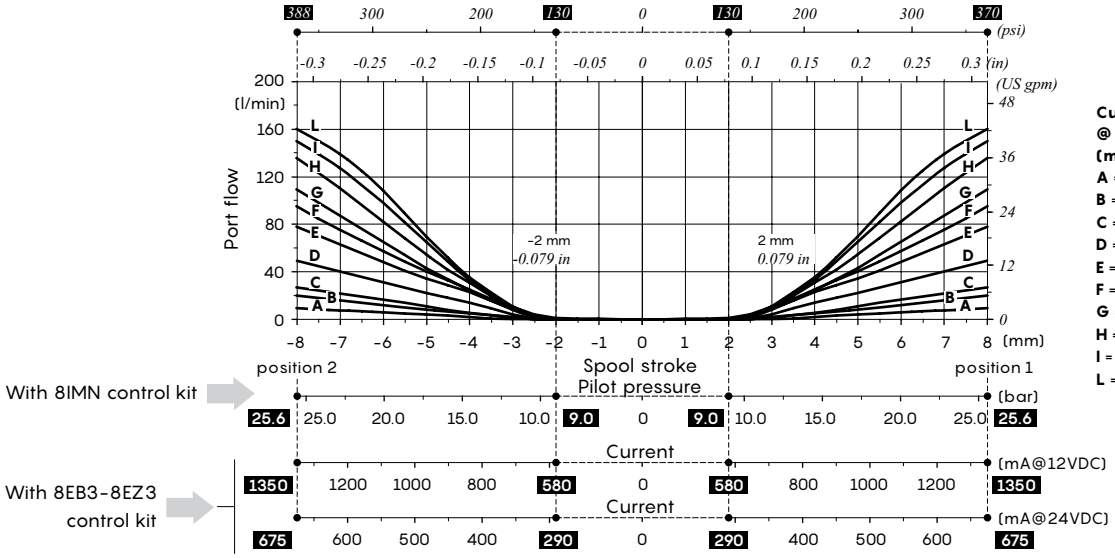

Curves with spool nom. flow @ 14 bar *(200 psi)* stand-by (margin pressure)

A = 10 l/min *(2.6 US gpm)*
B = 20 l/min *(5.3 US gpm)*
C = 30 l/min *(7.9 US gpm)*
D = 50 l/min *(13.2 US gpm)*
E = 70 l/min *(18.5 US gpm)*
F = 90 l/min *(23.8 US gpm)*
G = 110 l/min *(29.0 US gpm)*
H = 130 l/min *(34.3 US gpm)*
I = 150 l/min *(39.5 US gpm)*
L = 160 l/min *(42.3 US gpm)*

Floating spool metering curve

Qin = 160 l/min - *(42.3 US gpm)* - Open center circuit

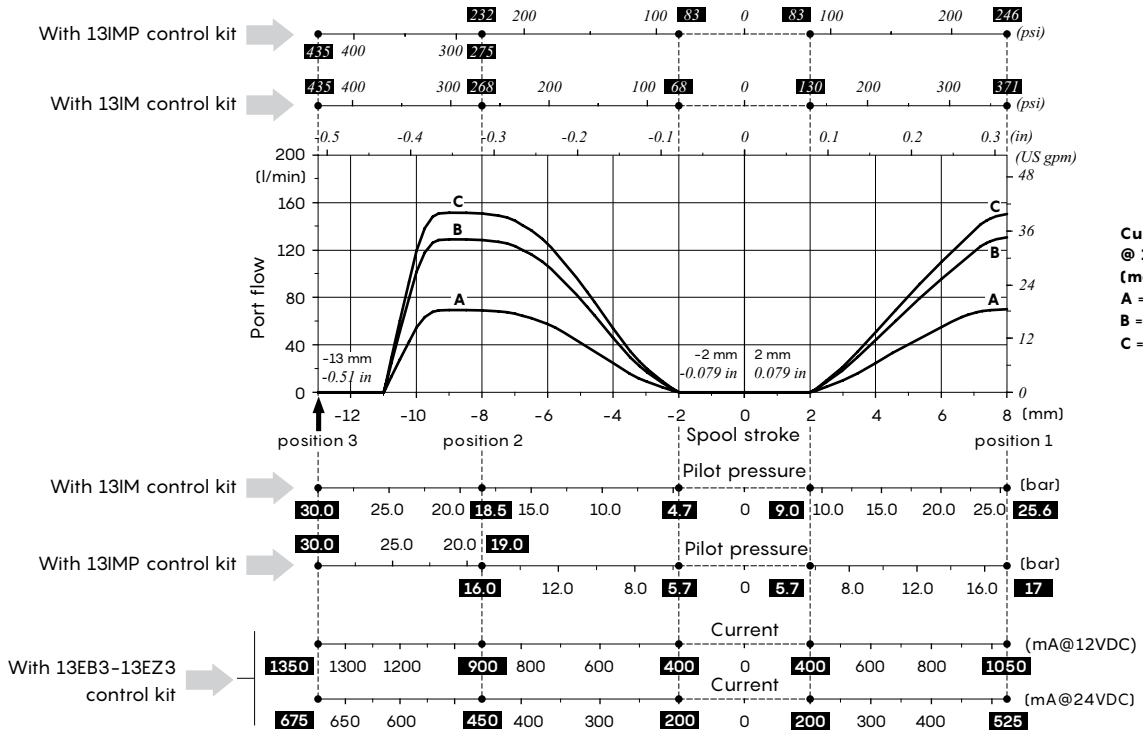

Curves with spool nom. flow @ 14 bar *(200 psi)* stand-by (margin pressure)

A = 70 l/min *(18.5 US gpm)*
B = 130 l/min *(34.3 US gpm)*
C = 150 l/min *(39.5 US gpm)*

Working section

"A" side spool positioners

With friction and neutral position notch

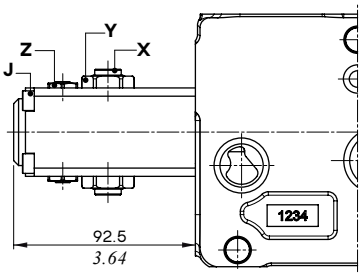

Type 7FTNA

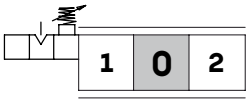

Wrenches and tightening torques

J = allen wrench 5 - 9.8 Nm *(7.2 lbft)*
X = allen wrench 4
Y = wrench 24 - manual tightening
Z = wrench 15 - 42 Nm *(31 lbft)*

With spring return to neutral position

It's configured with spring type D, as standard (see diagram); it's also available with lighter type C springs (8MC code: 5V08109002) or extra-lighter type B (8MB code 5V08109003).

Wrenches and tightening torques

J = allen wrench 5 - 9.8 Nm *(7.2 lbft)*

Types 8MD/8MC/8MB

Standard/lighter/extra-lighter springs

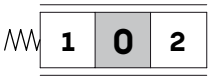

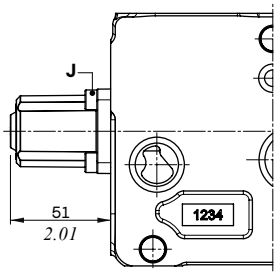

Force vs. Stroke diagram

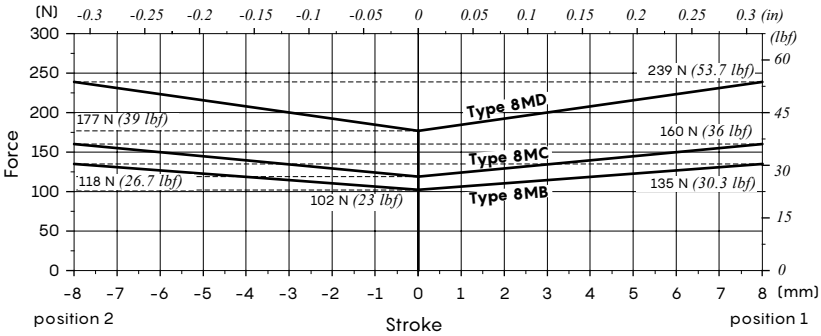

With spring return to neutral position, for floating circuit

Wrenches and tightening torques

J = allen wrench 5 - 9.8 Nm *(7.2 lbft)*

Type 13

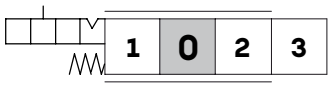

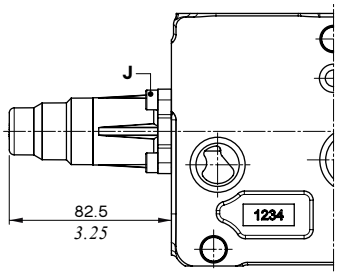

Force vs. Stroke diagram

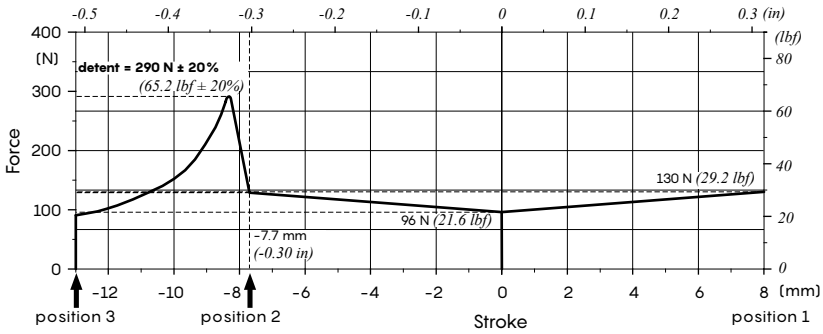

Release force from pos.3: 260 N ± 20% *(58.5 lbf ± 20%)*

Working section

"B" side spool control kit

Lever box

Type L

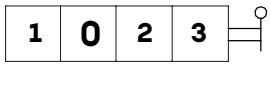

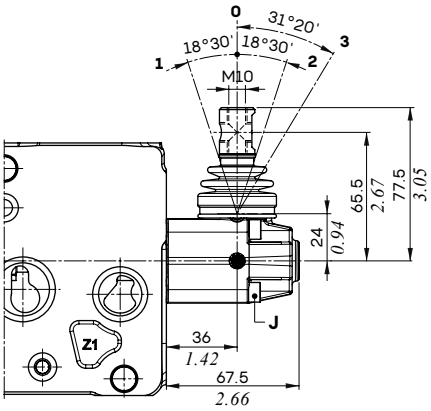

L180 configuration

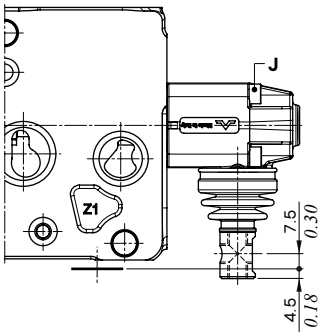

Type LFG

Spool stroke limiter on A and B ports

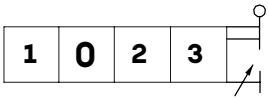

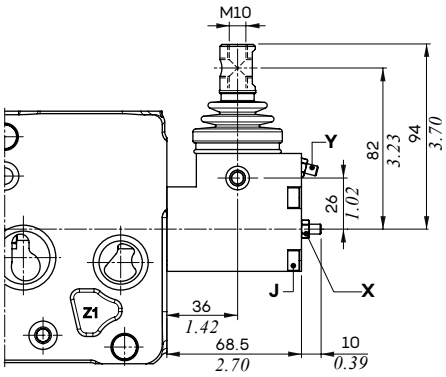

Wrenches and tightening torques

J = allen wrench 5 - 9.8 Nm *(7.2 lbft)*

X = allen wrench 2.5

Y = wrench 8 - 6.6 Nm *(4.9 lbft)*

Without lever box

Type SLP

With dust-proof plate

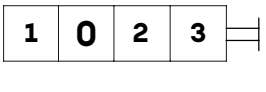

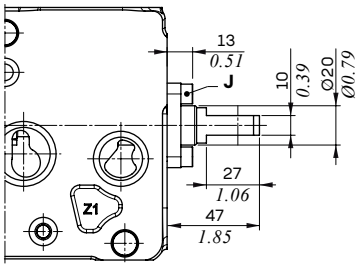

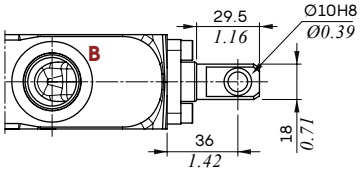

Type TQ

Flexible cable connection

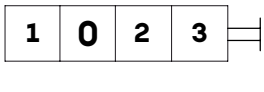

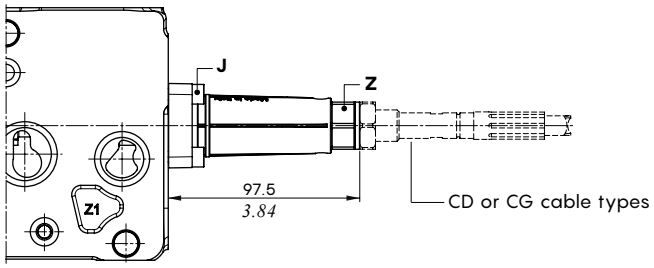

Wrenches and tightening torques

J = allen wrench 5 - 9.8 Nm *(7.2 lbft)*

Z = wrench 24

Working section

"B" side spool control kit

Joysticks for two section operation

Type LCB

1	0	2
1	0	2

LCB1 configuration

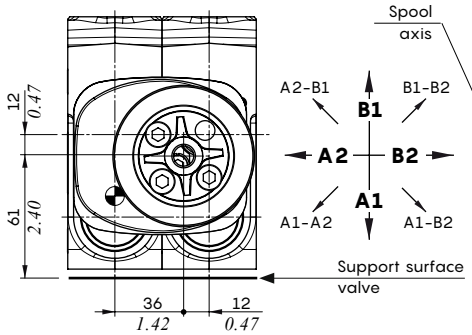

LCB2 configuration

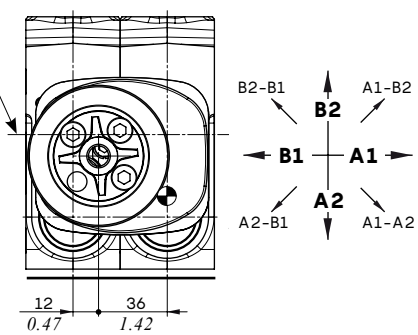

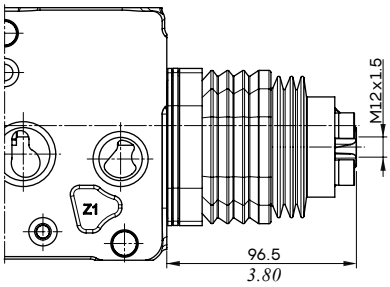

LCB3 configuration

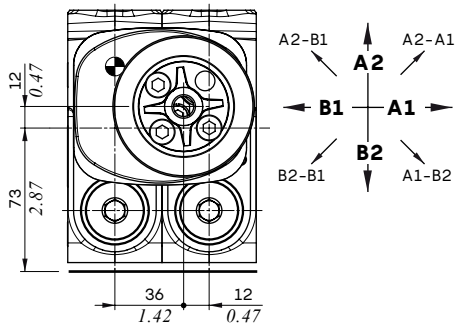

LCB4 configuration

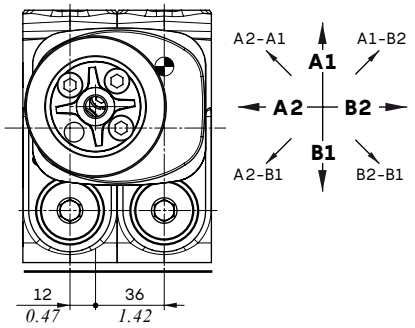

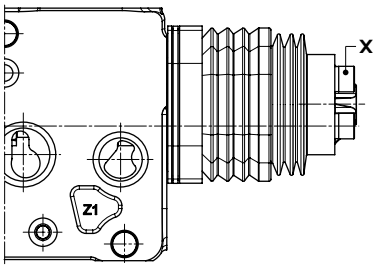

Wrenches and tightening torques

X = allen wrench 6 - 24 Nm *(17.7 lbft)*

LCB1 configuration example

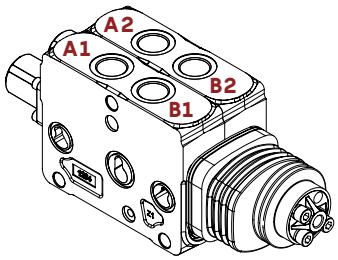

Working angles

Horizontal axis

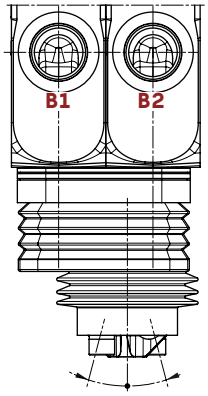

Vertical axis

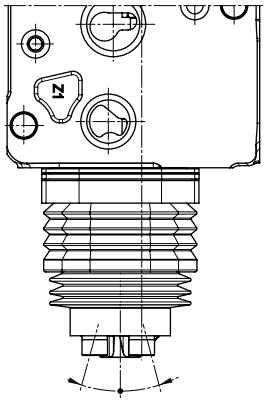

Max. working angles	Horizontal axis	Vertical axis
Single action operation	19°42'	19°41'
Single action operation with floating	operation not available	operation not available
Two section operation	21°22'	19°41'
Two section operation with floating	operation not available	operation not available

Working section

Proportional hydraulic control

Type 81MNOH

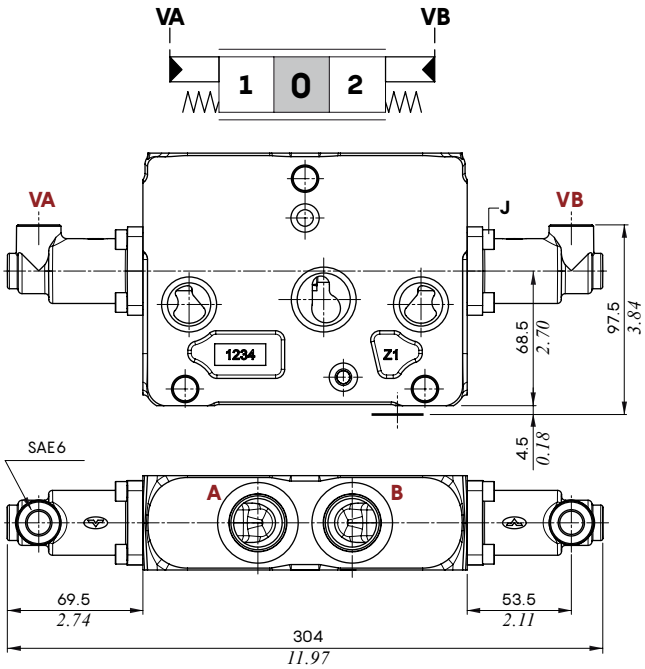

Type 81MNOHF3

With spool stroke limiter on ports A and B

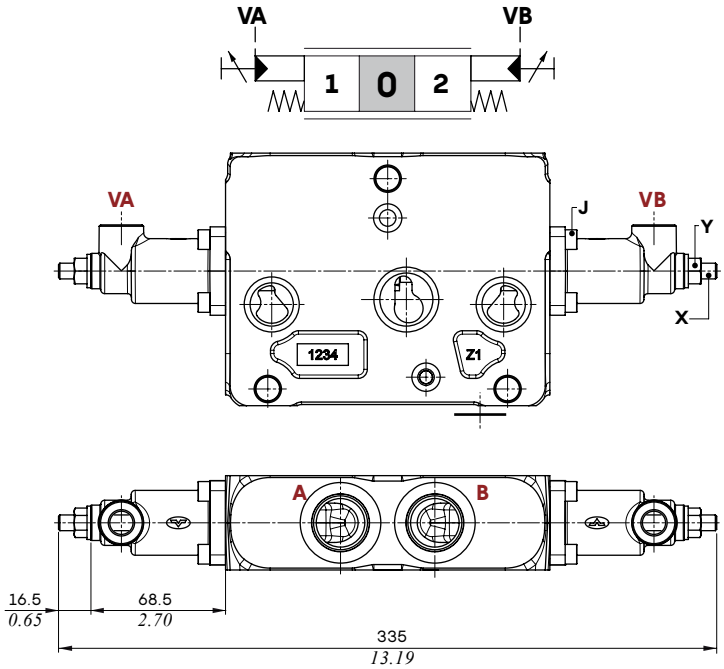

Features (all types)

Max. pressure . . . . . : 50 bar *(725 psi)*

Wrenches and tightening torques

J = allen wrench 5 - 9.8 Nm *(7.2 lbft)*

X = allen wrench 4

Y = wrench 13 - 24 Nm *(17.7 lbft)*

Stroke vs. Pressure diagram

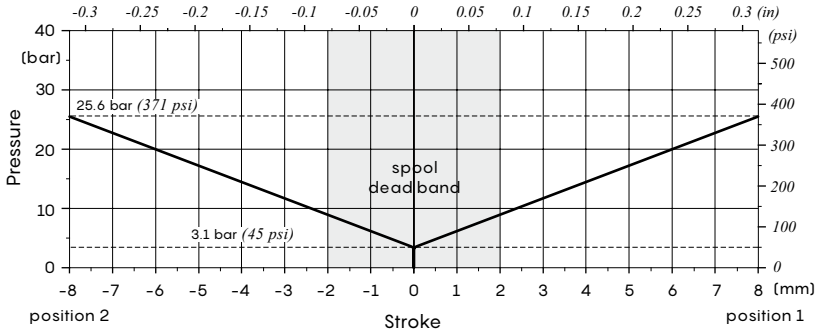

Suggested pressure control curve: type 089

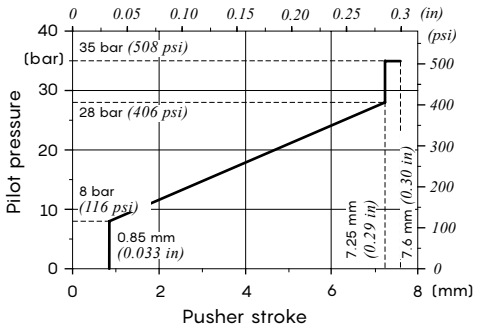

Working section

Proportional hydraulic control

Type 13IM - 13IMP

For floating circuit

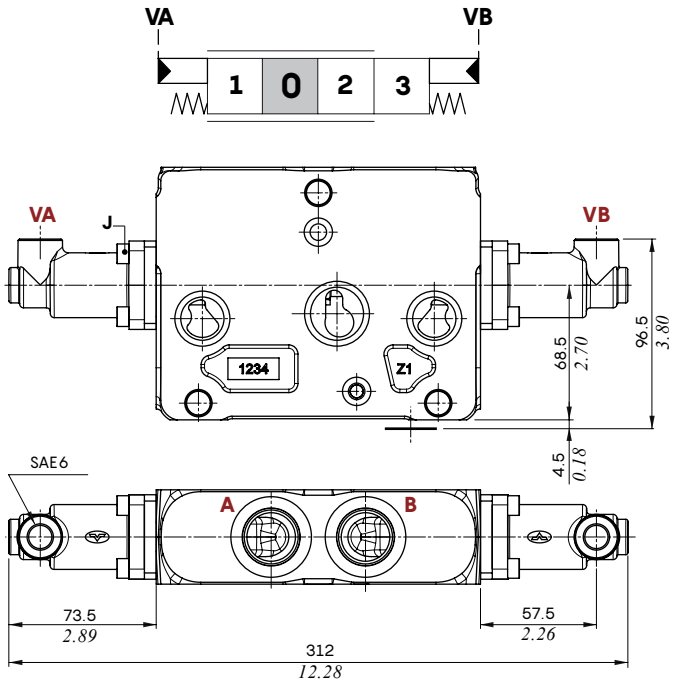

Features

Max. pressure . . . . . .: 50 bar *(725 psi)*

Wrenches and tightening torques

J = allen wrench 5 - 9.8 Nm *(7.2 lbft)*

Type 13IM - suggested pressure control curve on port VA: type 089

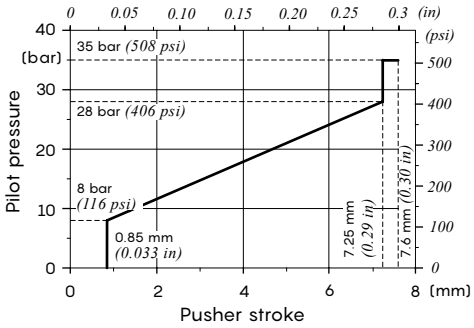

Type 13IMP - suggested pressure control curve on port VA: type 073

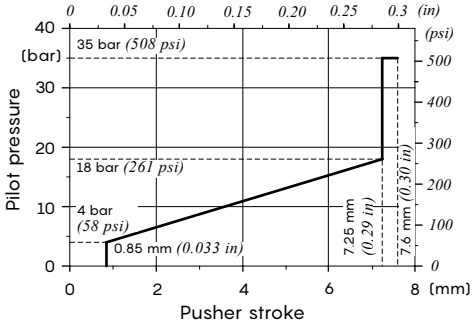

Type 13IM: Stroke vs. Pressure diagram

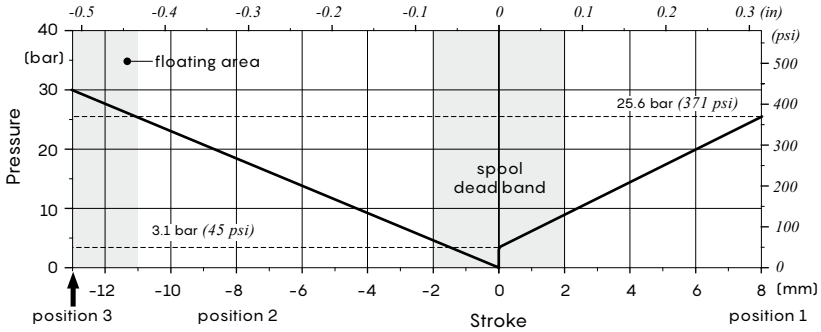

Type 13IM - suggested pressure control curve on port VB: type 033

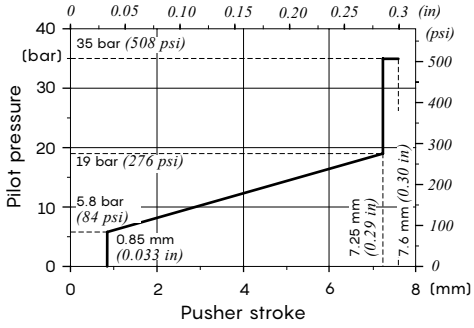

Type 13IMP: Stroke vs. Pressure diagram

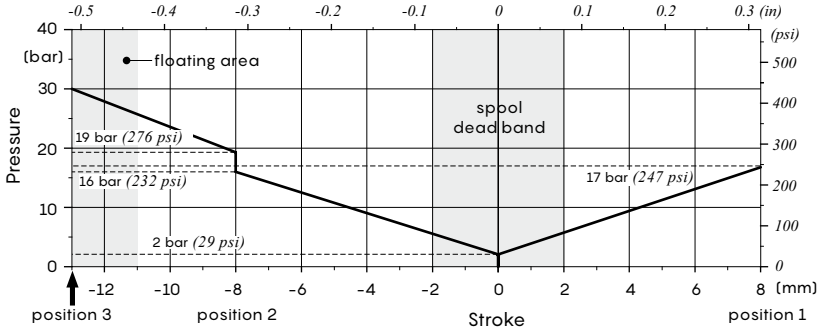

Type 13IMP - suggested pressure control curve on port VB: type E073

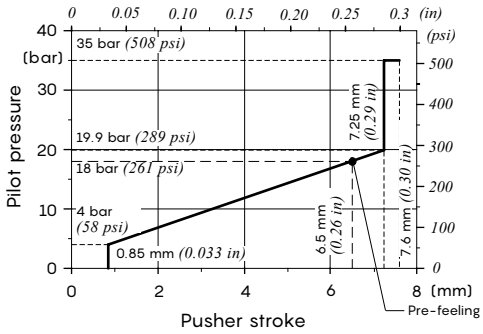

Electrohydraulic control performace data

Following specifications are measured with:
- mineral oil of 46 mm²/s - *46 cSt* viscosity at 40°C - *104°F* temperature,
- standard spools, connecting P⇒A⇒B⇒T ports without flow multiplication,
- 12 VDC and 24 VDC nominal voltage with ± 10% tolerance.

Following electrohydraulic controls need CED400W electronic unit; for information please contact Sales Department.

Specifications		Spool control type			
		8EB3	13EB3	8EZ3	13EZ3
Electric specifications					
Coil impedance	12 VDC	4,72 Ω	4,72 Ω	4,72 Ω	4,72 Ω
	24 VDC	20,8 Ω	20,8 Ω	20,8 Ω	20,8 Ω
Max. operating current	12 VDC	1,5 A	1,5 A	1,5 A	1,5 A
	24 VDC	0,75 A	0,75 A	0,75 A	0,75 A
No load current consumption		0	0	0	0
Hysteresis max. (1)				With lever box configured controls	
	external drain	3% 4% with lever	6% 8% with lever	4%	8%
	internal drain	4% 5% with lever	7% 10% with lever	5%	10%
Time response	from 0 ⇒ 100% of stroke	< 80 ms	< 100 ms	< 80 ms	< 100 ms
	from 100% ⇒ 0 of stroke	< 60 ms	< 80 ms	< 60 ms	< 80 ms
Min. flow control signal	12 VDC	580 mA	400 mA	580 mA	400 mA
	24 VDC	290 mA	200 mA	290 mA	200 mA
Max. flow control signal	12 VDC	1350 mA	P⇒A: 1050 mA P⇒B: 900 mA	1350 mA	P⇒A: 1050 mA P⇒B: 900 mA
	24 VDC	675 mA	P⇒A: 525 mA P⇒B: 450 mA	675 mA	P⇒A: 525 mA P⇒B: 450 mA
Float flow control signal	12 VDC		1350 mA		1350 mA
	24 VDC		675 mA		675 mA
Dither frequency	low frequency	150 Hz		150 Hz	
	high frequency	180 Hz - 350 mA		180 Hz - 350 mA	
Insertion		100%		100%	
Coil insulance		Class H (180°C - *356°F*)		Class H (180°C - *356°F*)	
Connector type		AMP JPT - Deutsch DT		AMP JPT - Deutsch DT	
Weather protection (connector)		IP65 (JPT type) - IP69K (DT type)		IP65 (JPT type) - IP69K (DT type)	
Hydraulic specifications					
Max. pressure		40 bar *(580 psi)*		50 bar *(725 psi)*	
Max. back pressure		10 bar *(145 psi)*		10 bar *(145 psi)*	

Note (1) hysteresis is indicated at nominal supply voltage and f = 0.008 Hz for one cycle (one cycle = neutral ⇒ full A ⇒ neutral ⇒ full B ⇒ neutral).
For the calculation rules see "Appendix A" on page 170.

Working section

Electrohydraulic control performace data

Types 8EB3-8EZ3: Stroke vs. Current diagram

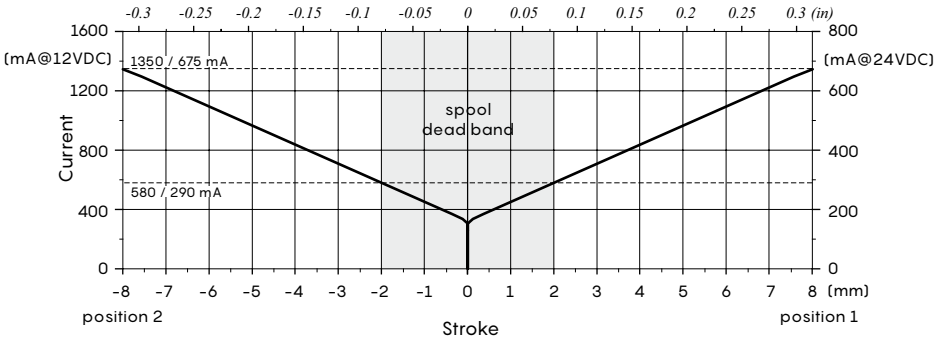

Types 13EB3-13EZ3: Stroke vs. Current diagram

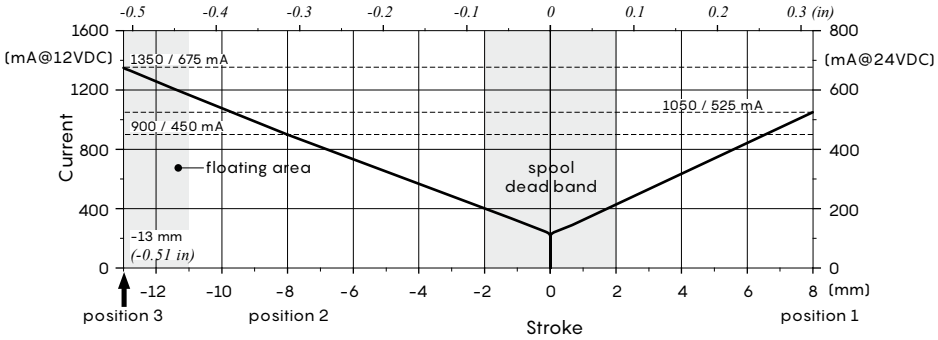

Electrohydraulic controls: spool position sensor

The sensor can be ordered exclusively through the EB and EZ type electrohydraulic controls; see page 136 for available control list.

SPSL sensor

The SPSL position sensor converts the spool movements into a voltage linear signal.

Working conditions		
Voltage supply		5 VDC
Current absorption		< 10 mA (no load)
Mechanical life		3x10⁶
Connector type		DT04-4P Deutsch
Weather protection		IP67 / IP69K
Working temperature		from -40°C to 105°C *(from -40°F to 221°F)*
Working pressure		350 bar *(5100 psi)*
Max. electrical stroke		±10 mm *(±0.39 in)*
Max. mechanical stroke		±10 mm *(±0.39 in)*
Output signal	range	from 0.5 to 4.5 V
	linearity	± 5%
	spool in neutral	2.5 ± 0.2 V
	max. current	1 mA
EMC compatibility		ISO 13766 / ISO 14982
Mechanical vibrations, shock, bumps		IEC 68-2-6,-27,-29

SPSL sensor output signal

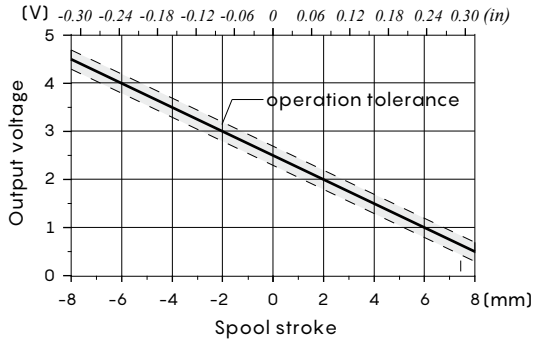

Deutsch DT04-4P connector	
Pin	**Function**
1	+ 5V
2	not connected
3	GND
4	signal OUT

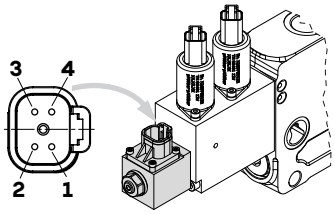

Deutsch DT06-4S mating connector, code 5CON140072

SPSD sensor

The SPSD position sensor converts the spool movements into an electric digital signal.

Working conditions		
Voltage supply		from 9 to 32 VDC
Current absorption		< 10 mA (no load)
Mechanical life		3x10⁶
Connector type		DT04-4P Deutsch
Weather protection		IP67 / IP69K
Working temperature		from -40°C to 105°C *(from -40°F to 221°F)*
Working pressure		350 bar *(5100 psi)*
Max. electrical stroke		±10 mm *(±0.39 in)*
Max. mechanical stroke		±10 mm *(±0.39 in)*
Output signal	type	PNP
	max. current	6 mA
EMC compatibility		ISO 13766 / ISO 14982
Mechanical vibrations, shock, bumps		IEC 68-2-6,-27,-29

SPSD sensor output signal

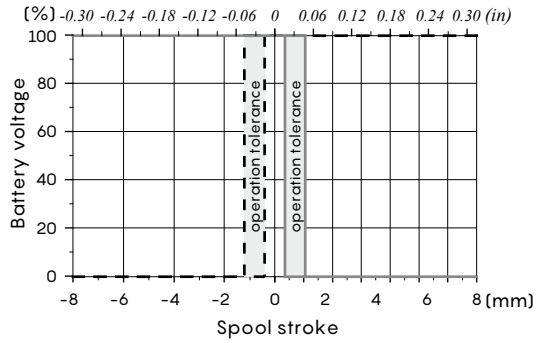

Deutsch DT04-4P connector	
Pin	**Function**
1	Out A
2	GND
3	VB +
4	Out B

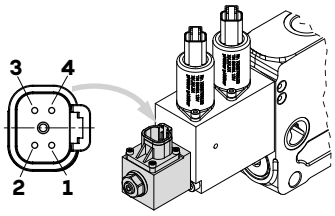

Deutsch DT06-4S mating connector, code 5CON140072

Working section

Two-side electrohydraulic control

Control types

❶: With AMP JPT connector - AMP JPT mating connector, code: 5CON003

❷: With Deutsch DT04 connector - Deutsch DT06-2S mating connector code: 5CON140031

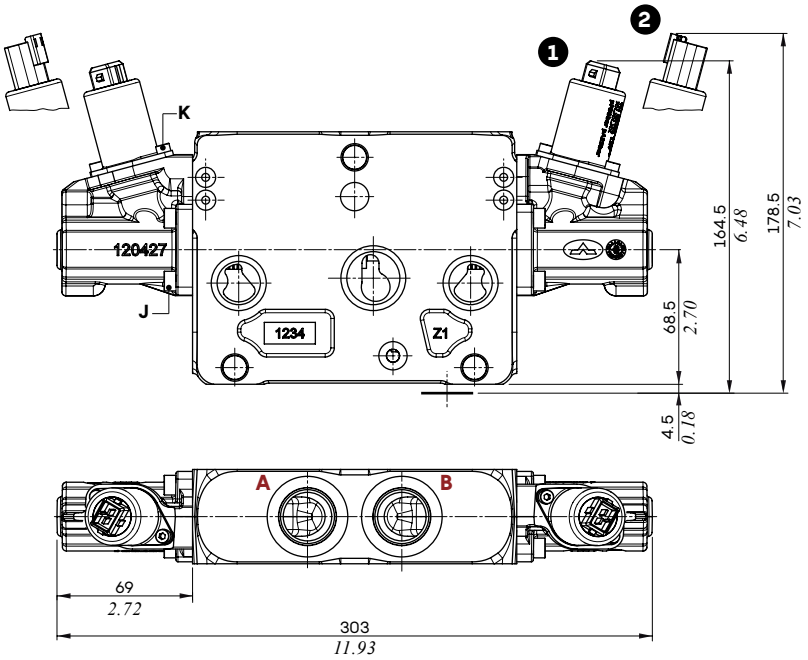

Types 8EB3 - 8EB34

Without lever control

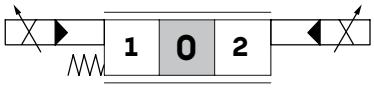

Types 13EB3 - 13EB34

For floating circuit

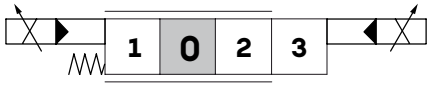

Wrenches and tightening torques

J = allen wrench 5 - 9.8 Nm *(7.2 lbft)*

K = allen wrench 3 - 5 Nm *(3.7 lbft)*

X = allen wrench 5

Y = wrench 17 - 24 Nm *(17.7 lbft)*

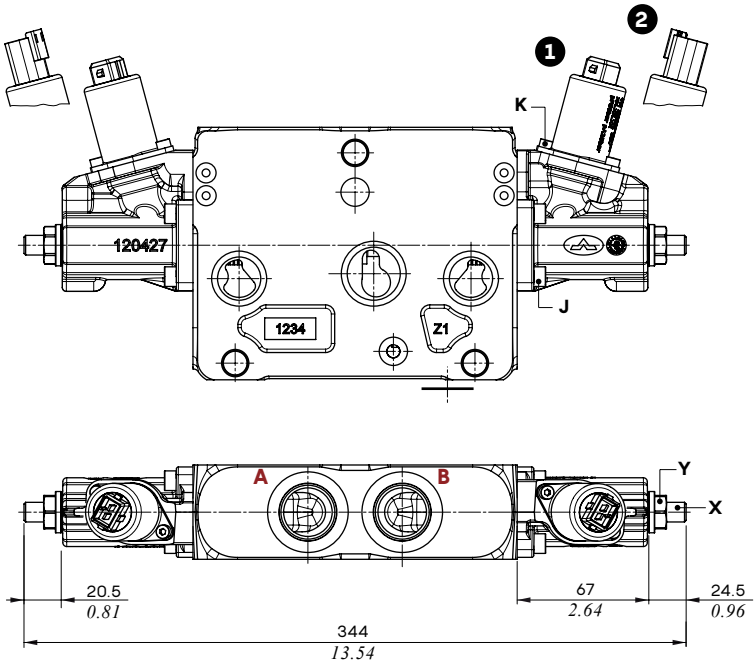

Types 8EB3F3 - 8EB34F3

With spool stroke limiter

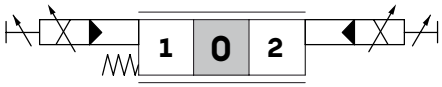

Working section

Two-side electrohydraulic control

Control types

❶: With AMP JPT connector - AMP JPT mating connector, code: 5CON003

❷: With Deutsch DT04 connector - Deutsch DT06-2S mating connector code: 5CON140031

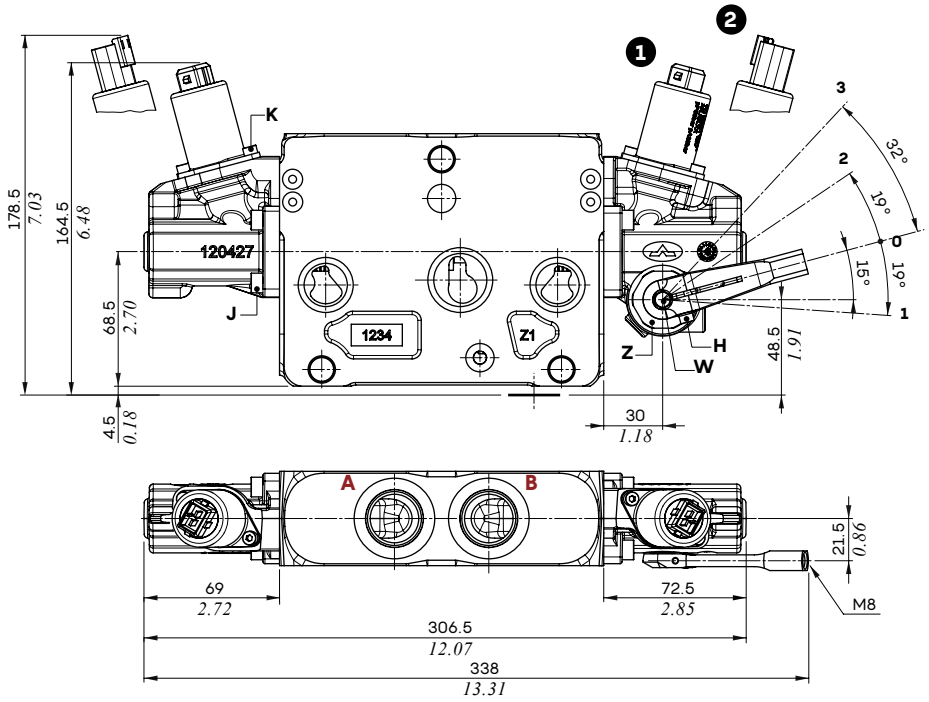

Types 8EB3LH - 8EB34LH

Lever control

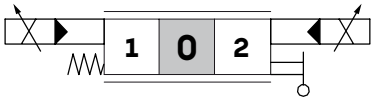

Types 13EB3LH - 13EB34LH

For floating circuit

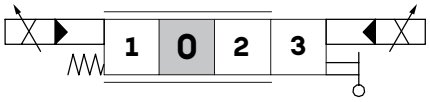

Wrenches and tightening torques

H = allen wrench 3 - 6.6 Nm *(4.9 lbft)*
J = allen wrench 5 - 9.8 Nm *(7.2 lbft)*
K = allen wrench 3 - 5 Nm *(3.7 lbft)*
X = allen wrench 3
Y = wrench 10 - 9.8 Nm *(7.2 lbft)*
Z = wrench 29 - 24 Nm *(17.7 lbft)*
W = wrench 8

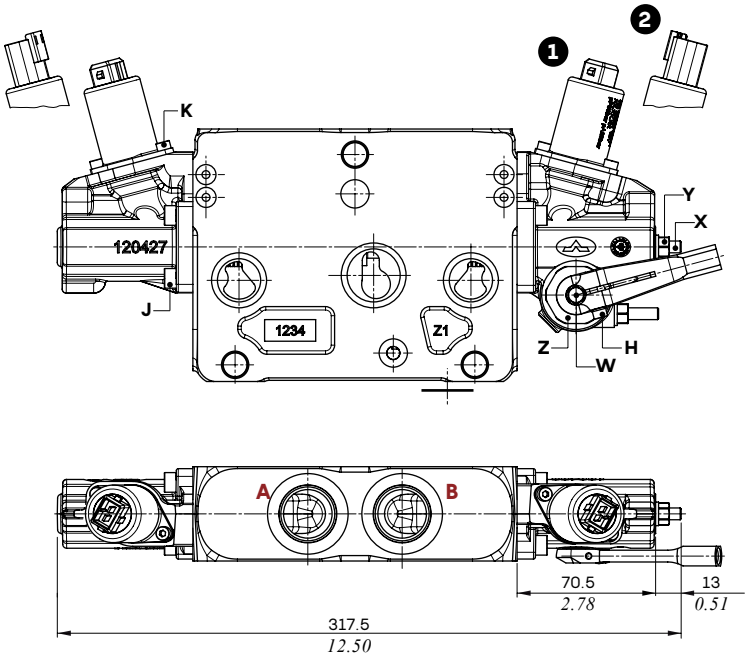

Types 8EB3LHF3 - 8EB34LHF3

Lever control with spool stroke limiter

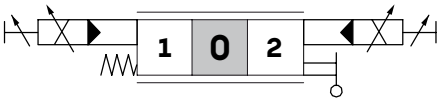

Types 13EB3LHF3 - 13EB34LHF3

For floating circuit

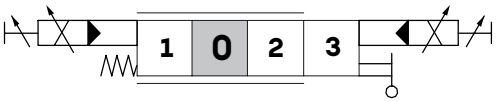

Working section

Two-side electrohydraulic control

Control type

❶: With AMP JPT connector - AMP JPT mating connector, code: 5CON003

Note: for other dimensions see previous page

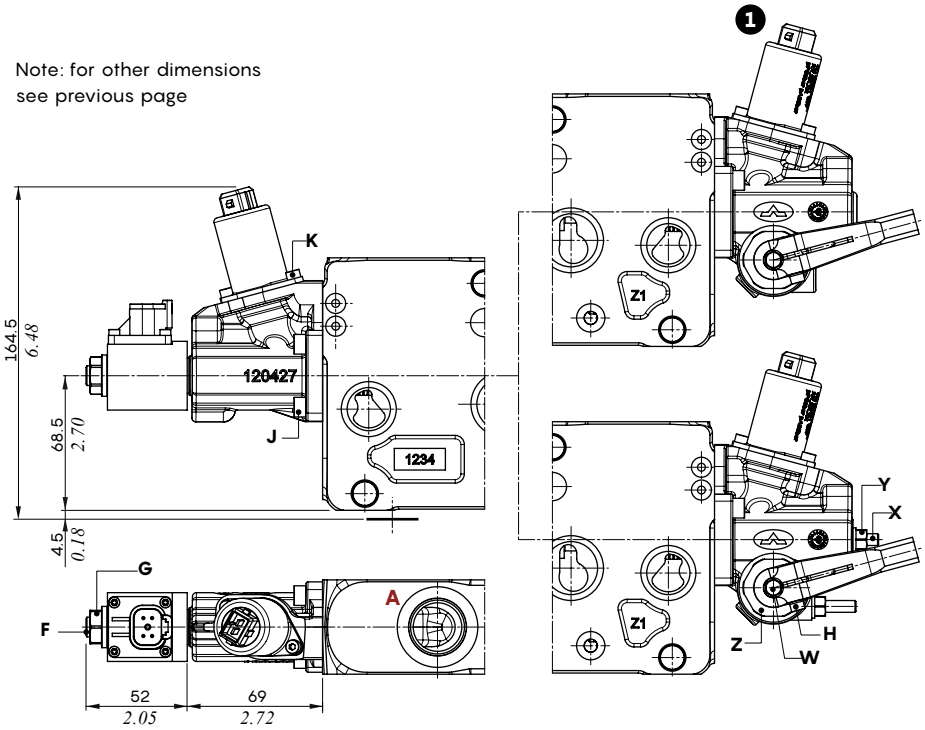

Type 8EB3LHSPSD
Lever control and digital output sensor SPSD

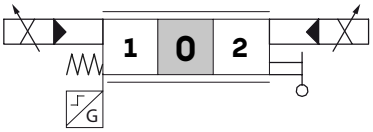

Type 8EB3LHF3SPSD
Digital output sensor SPSD and spool stroke limiter

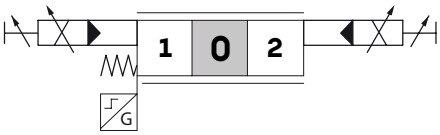

Wrenches and tightening torques

F = allen wrench 4 - 9.8 Nm *(7.2 lbft)*
G = wrench 17 - 9.8 Nm *(7.2 lbft)*
H = allen wrench 3 - 6.6 Nm *(4.9 lbft)*
J = allen wrench 5 - 9.8 Nm *(7.2 lbft)*
K = allen wrench 3 - 5 Nm *(3.7 lbft)*
X = allen wrench 3
Y = wrench 10 - 9.8 Nm *(7.2 lbft)*
Z = wrench 29 - 24 Nm *(17.7 lbft)*
W = wrench 8

Working section

One-side electrohydraulic control: "A" side

Control types

❶: With AMP JPT connector - AMP JPT mating connector, code: 5CON003

❷: With Deutsch DT04 connector - Deutsch DT06-2S mating connector code: 5CON140031

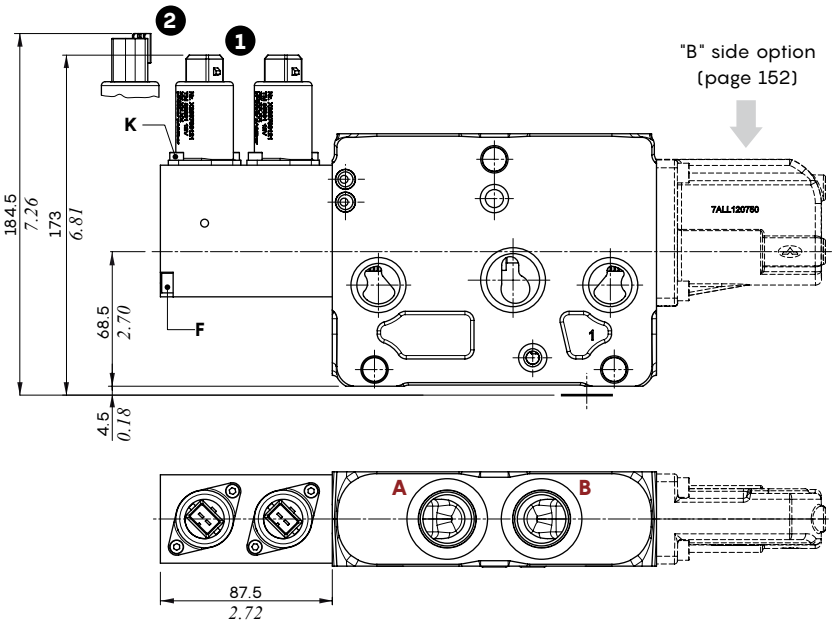

Types 8EZ3 - 8EZ34

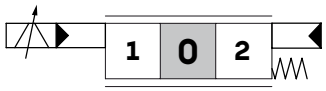

Types 13EZ3 - 13EZ34

For floating circuit

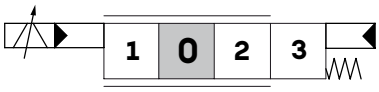

Wrenches and tightening torques

F = allen wrench 4 - 9.8 Nm *(7.2 lbft)*
G = wrench 17 - 9.8 Nm *(7.2 lbft)*
J = allen wrench 5 - 9.8 Nm *(7.2 lbft)*
K = allen wrench 3 - 5 Nm *(3.7 lbft)*

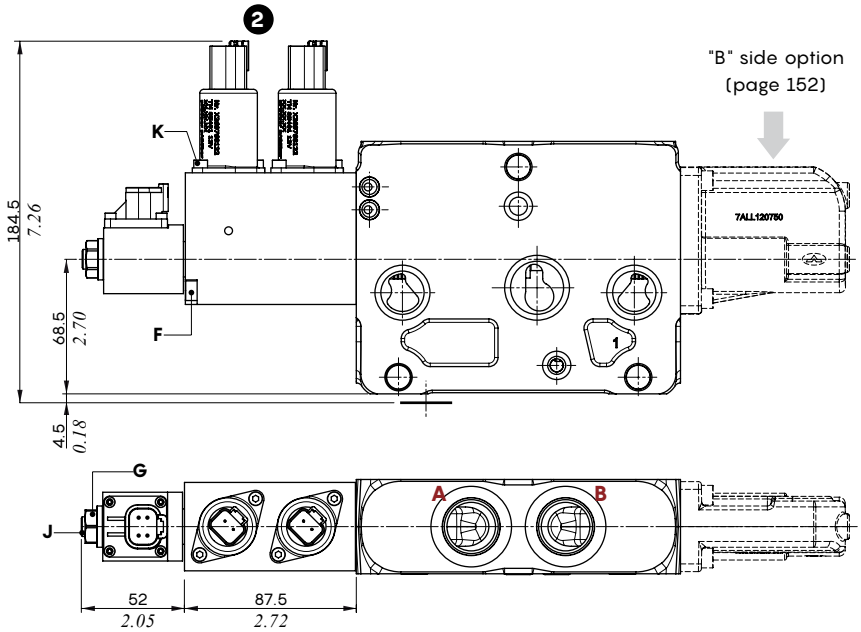

Types 8EZ34SPSL

Analog output sensor SPSL

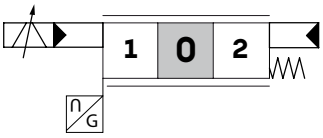

Working section

One-side electrohydraulic control: "B" side option

These options are available for one-side electyrohydraulic controls only.

Type LQ

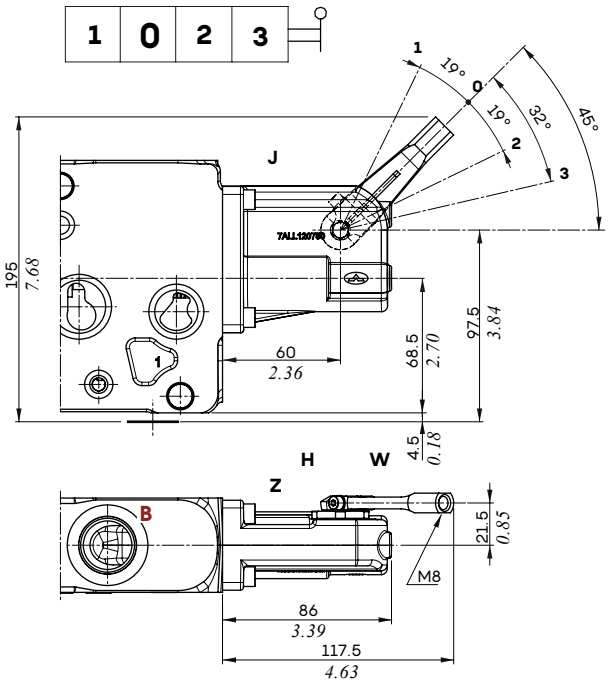

Type LQF3
Spool stroke limiter on
A and B ports

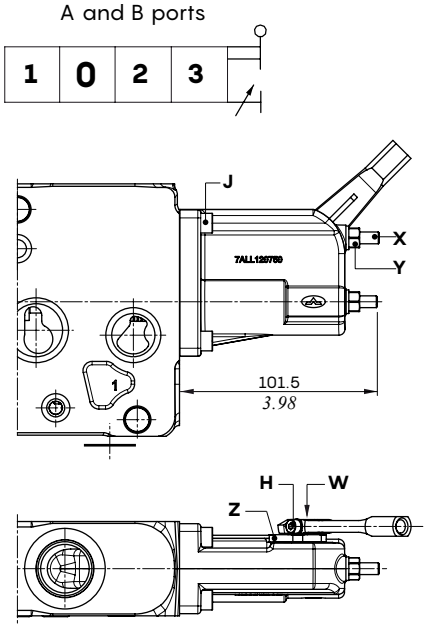

Type SLCQ
With endcap

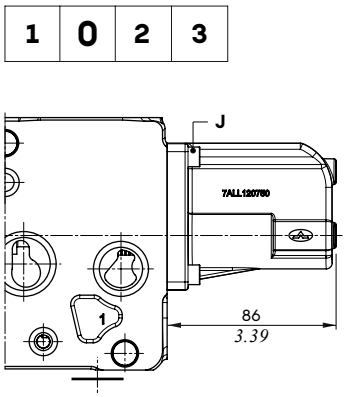

Wrenches and tightening torques

H = allen wrench 3 - 6.6 Nm *(4.9 lbft)*
J = allen wrench 5 - 9.8 Nm *(7.2 lbft)*
X = allen wrench 3
Y = wrench 10 - 9.8 Nm *(7.2 lbft)*
Z = wrench 29 - 24 Nm *(17.7 lbft)*
W = wrench 8

Working section

Port valves

Pressure relief valves, type UL
Anticavitation valve, type CL

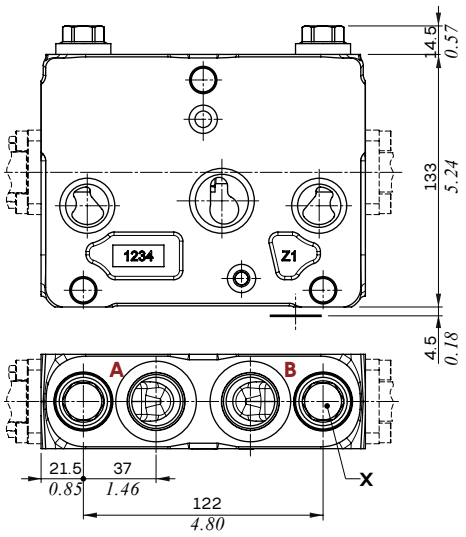

Antishock valves, type US
Anticavitation valve, type CS

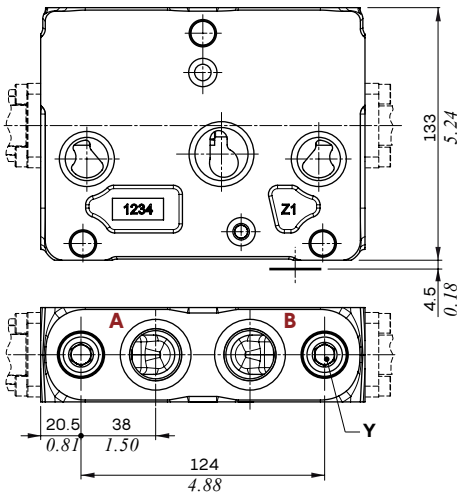

Types UL-US valve:

Types CL-CS valve: anticavitation

Wrenches and tightening torques

X = wrench 19 - 42 Nm *(31 lbft)* - (plug and valves)
Y = allen wrench 6 - 24 Nm *(17.7 lbft)* - (plug)
wrench 10 - 24 Nm *(17.7 lbft)* (valves)

Type UL, setting example
(5 l/min - *1.3 Us gpm*)

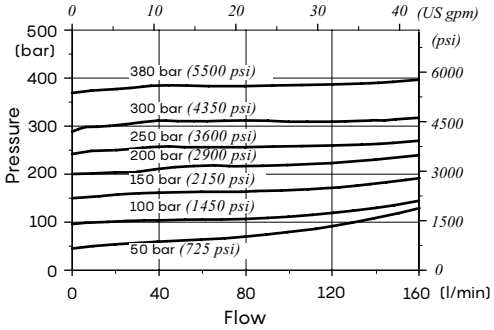

Type US, setting example
(10 l/min - *2.6 Us gpm*)

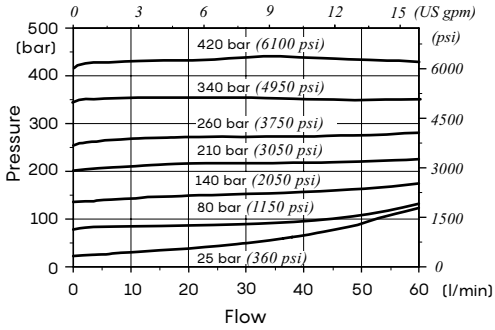

Types UL-CL, pressure drop
(in anticavitation)

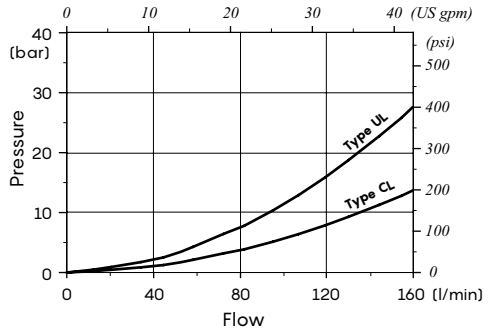

Types US-CS, pressure drop
(in anticavitation)

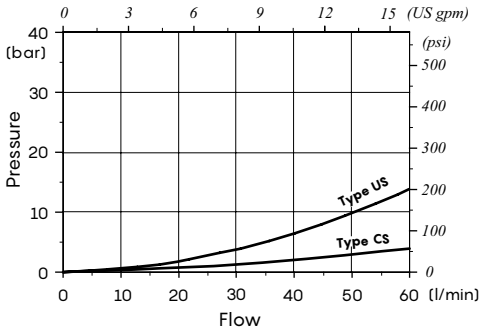

Outlet section part ordering codes

A For mechanical and proportional hydraulic controls configuration:

DPX160/RC3A-CL\VR3 - ... -12VDC

1 5 6 5

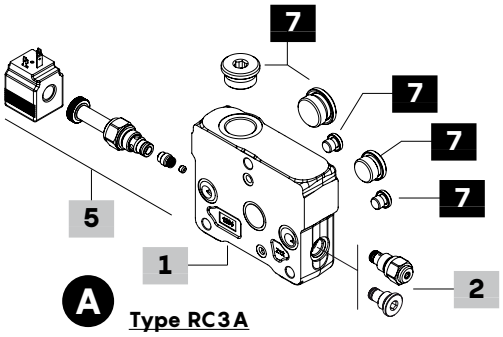

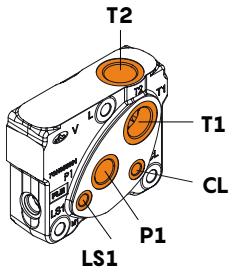

B For electrohydraulic control configuration:

DPX160/RCN3A(VBT)- ...

1 2

DPX160/RCR3A(RT)(VLT)(VBT)-...

1 4 3 2

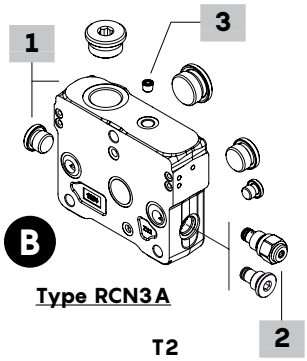

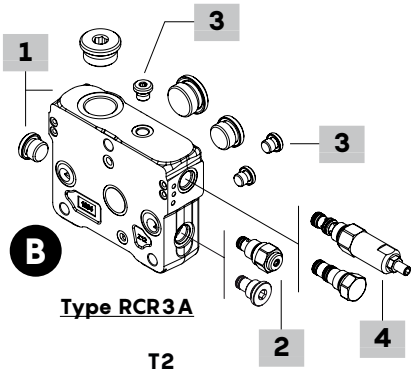

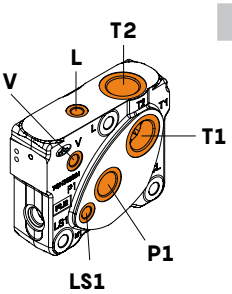

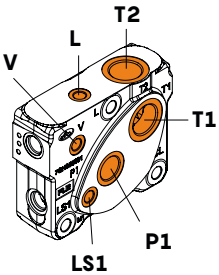

1 Outlet section kit * page 155

Outlet section is the same type for standard and High Pressure valve

For mechanical and proportional hydraulic controls

TYPE: **DPX160/RC1-SAE** CODE: YFIA205700S
DESCRIPTION: With T2 upper port
TYPE: **DPX160/RC3-SAE** CODE: YFIA205702S
DESCRIPTION: With T2 upper port and P1, T1, LS1 side ports
TYPE: **DPX160/RC3-CL-SAE** CODE: YFIA205714S
DESCRIPTION: As previous one with clamps release arrang. and CL port

For electrohydraulic controls

TYPE: **DPX160/RCN1-SAE** CODE: YFIA205706S
DESCRIPTION: Without pressure reducing valve arrangement, L upper and V side ports, T2 upper port
TYPE: **DPX160/RCN3-SAE** CODE: YFIA205713S
DESCRIPTION: As previous one with P1, T1, LS1 side ports
TYPE: **DPX160/RCN3-CL-SAE** CODE: YFIA205715S
DESCRIPTION: As previous one with clamps release arrang. and CL port
TYPE: **DPX160/RCR1-SAE** CODE: YFIA205703S
DESCRIPTION: With pressure reducing valve arrangement, L upper and V side ports, T2 upper port
TYPE: **DPX160/RCR3-SAE** CODE: YFIA205707S
DESCRIPTION: As previous one with P1, T1, LS1 side ports
TYPE: **DPX160/RCR3-CL-SAE** CODE: YFIA205716S
DESCRIPTION: As previous one with clamps release arrang. and CL port

Note: for outlet sections with different port arrangement please contact Sales Dpt.

2 Bleed valve page 155

TYPE	CODE	DESCRIPTION
(-)	X138810000V	Bleed valve
(VBT)	XTAP525320V	Valve blanking plug

3 Pilot and drain *

TYPE	CODE	DESCRIPTION
(-)	4TAP306006	M6-DIN906 plug, for external drain
(VLT)	XTAP719160	SAE6 plug, nr.2 for int. pilot and drain

4 Pressure reducing valve page 156

TYPE	CODE	DESCRIPTION
(-)	4AC9539900	Press. reducing valve, 32 bar (*464 psi*)
(RT)	3XTP3535100V	Valve blanking plug (SAE 08/3)

5 Clamp release kit page 156

TYPE	CODE	DESCRIPTION
CL	5KIT409010V	Clamp release kit, 12VDC

6 Section threading

Only specify if it is different from **BSP** standard (see page 7).

7 Parts *

CODE	DESCRIPTION
3XTAP838200	SAE16 plug: for RC1/RCN1/RCR1 = nr. 1 for RC3/RCN3/RCR3 = nr. 2
3XTAP832200	SAE12 plug, for RC1/RCN1/RCR1 = nr. 0 for RC3/RCN3/RCR3 = nr. 1
3XTAP817130	SAE6 plug, for RC1/RCN1/RCR1 = nr. 0 for RC3/RCN3/RCR3 = nr. 1 for RC3-CL/RCN3-CL/RCR3-CL = nr. 2

NOTE (*): Codes are referred to **UN-UNF** thread.
NOTE (-): "TYPE" omitted in outlet section description

Outlet section

Dimensions and hydraulic circuit

Example of RC3A outlet section

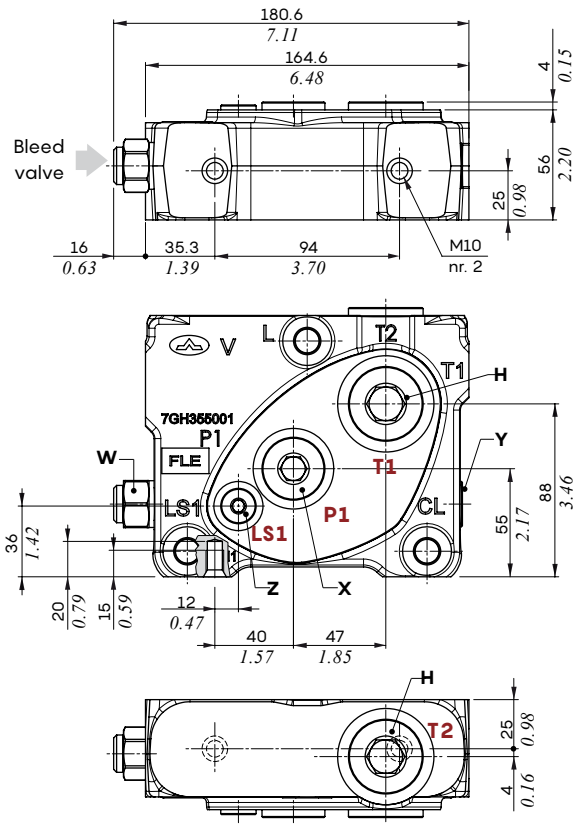

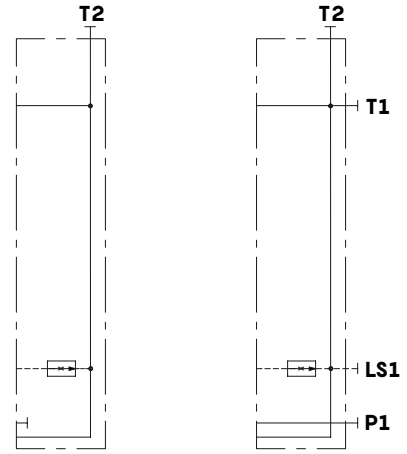

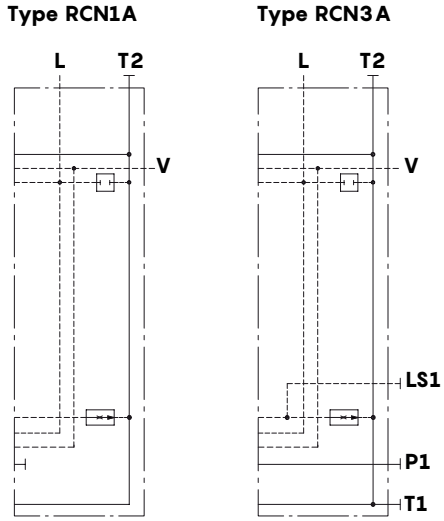

Example of RCN3A outlet section

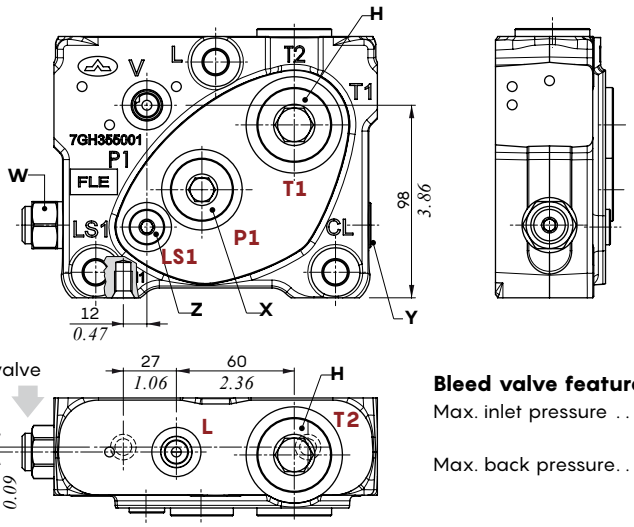

Wrenches and tightening torques

X = allen wrench 12 - 42 Nm *(31 lbft)*
H = allen wrench 17 - 42 Nm *(31 lbft)*
Y = allen wrench 8 - 24 Nm *(17.7 lbft)*
Z = allen wrench 6 - 24 Nm *(17.7 lbft)*
W = wrench 24 - 42 Nm *(31 lbft)*

Bleed valve features

Max. inlet pressure . . . . .: 380 bar *(5550 psi)*
Max. back pressure. . . . .: 25 bar *(363 psi)*

Bleed valve diagram
Flow vs. Pressure

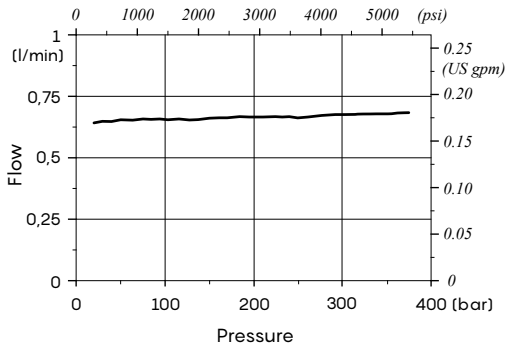

Outlet section

Dimensions and hydraulic circuit

Example of RCR3A outlet section

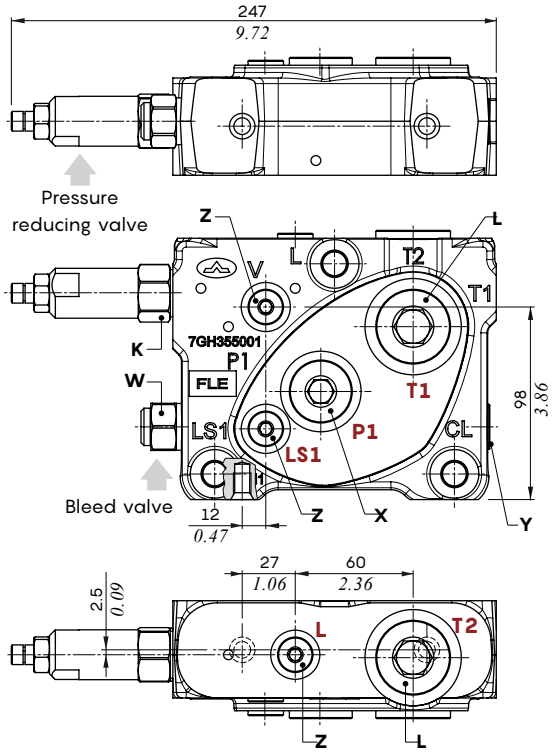

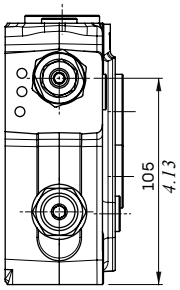

Type RCR1A

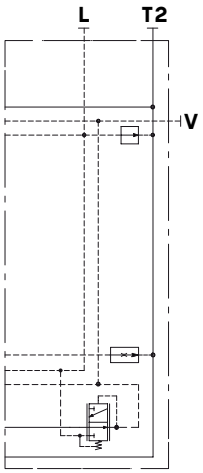

Type RCR3A

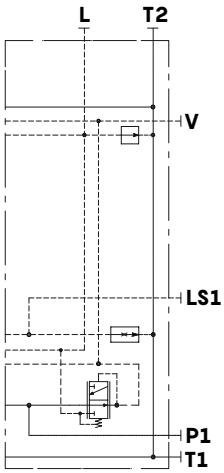

Pressure reducing valve diagram
Reduced pressure vs. Flow

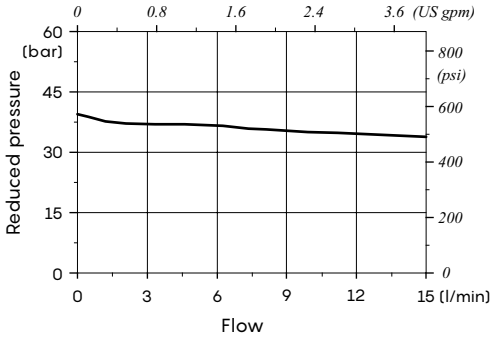

Pressure reducing valve features

Reduced press. range . . . : from 3.5 to 35 bar *(from 50 to 500 psi)*
Max. inlet pressure . . . . . : 420 bar *(5500 psi)*
Nominal flow . . . . . : 15 l/min *(4 US gpm)*

Wrenches and tightening torques

H = manual tightening
K = wrench 24 - 30 Nm *(22 lbft)*
X = allen wrench 12 - 42 Nm *(31 lbft)*
L = allen wrench 17 - 42 Nm *(31 lbft)*
Y = allen wrench 8 - 24 Nm *(17.7 lbft)*
Z = allen wrench 6 - 24 Nm *(17.7 lbft)*
W = wrench 24 - 42 Nm *(31 lbft)*

Outlet sections with clamp release kit

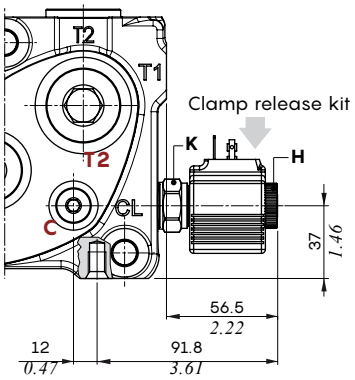

Type RC3A-CL

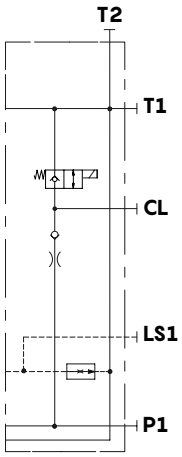

Type RCN3A-CL

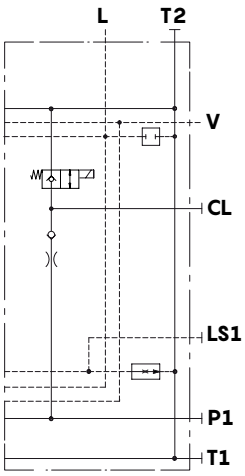

Type RCR3A-CL

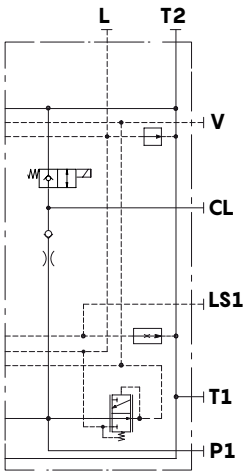

Features

Max. flow. . . . . : 45 l/min *(12 US gpm)*
Max. pressure . . . . . : 315 bar *(4600 psi)*
Internal leakage . . . . . : max. 3 cm³/min @ 100 bar *(max. 0.018 in³/min @ 1450 psi)*

For coil features and options see **BER** type coil at page 160.

Intermediate section

DPX160 directional valve — DPX100 directional valve

DPX160/1/AM3B(TGW3-175\ELTN)/PE-E107(130\130)-8EB3F3.UL3T/EIRE-TAP(VLM)/PE-E101(80\80)-8EB3TF3.U3T

Nr. of working sections — Inlet section — Working section — **1** — **2** — Working section

DPX100 directional valve — Common directional valves specifications

/PE-E101(80\80)-8EB3TF3.U3T/RDR(03)/DPX100/2-SAE-12VDC

Working section — Outlet section — Nr. of working sections

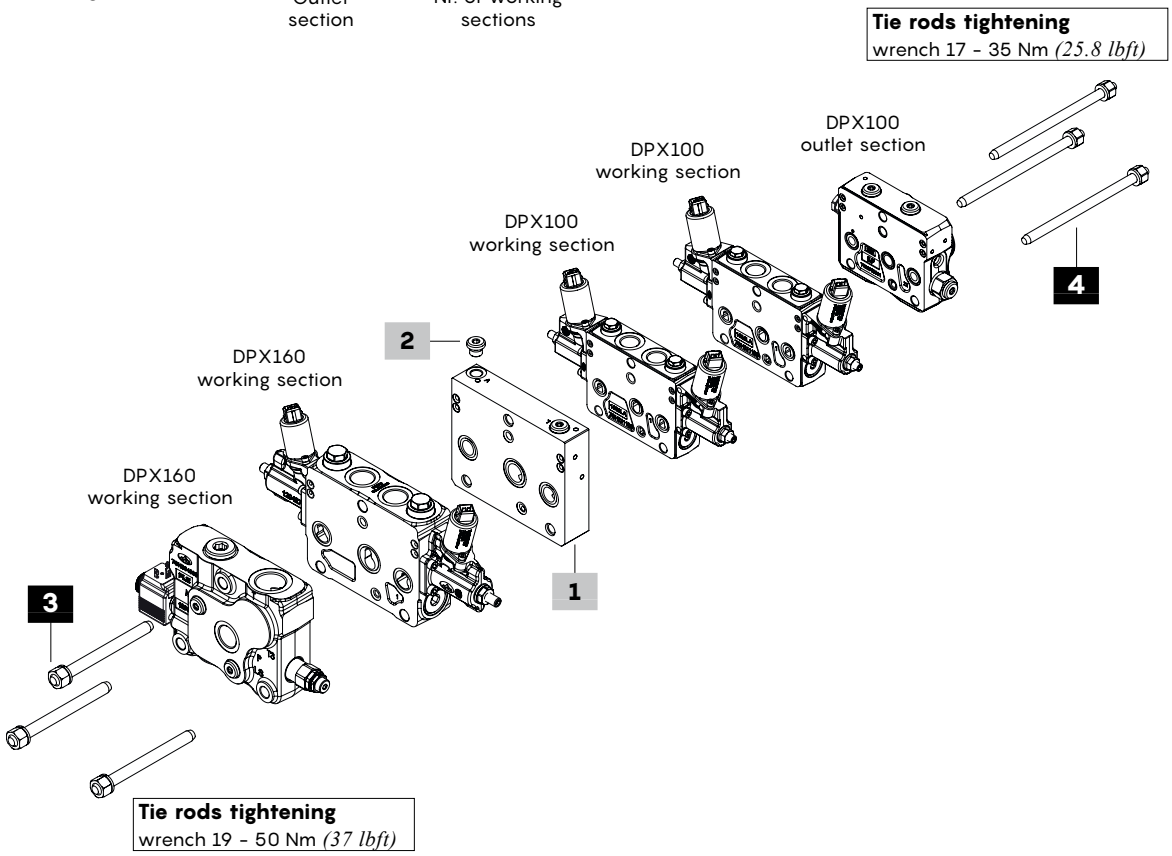

1 Intermediate section page 158

TYPE	CODE	DESCRIPTION
EIR	3EL4053004*	For valves with hydraulic or mechanical controls, with M1 pressure gauge port
	5GUA160V	FPM o-ring seal kit
EIRE	650425002V#	For valves with two-side electrohydraulic control; with pilot V, drain L, M1 pressure gauge ports
EIRZS	650425004V#	As previous one, for valves with one-side electrohydraulic control

2 Pilot and drain

CODE	DESCRIPTION
XGIU622301V#	Male G1/4 to female SAE6 joint
XTAP81713V#	SAE6 plug for internal pilot and drain
4TAP310007	Optional M10x1 DIN906 plug for external drain

3 DPX160 side assembling kit

CODE	DESCRIPTION
5TIR112141	For 1 working section valve
5TIR112189	For 2 working section valve
5TIR112237	For 3 working section valve
5TIR112285	For 4 working section valve
5TIR112333	For 5 working section valve
5TIR112382	For 6 working section valve

4 DPX100 side assembling kit

CODE	DESCRIPTION
5TIR110142	For 2 working section valve
5TIR110178	For 3 working section valve
5TIR110216	For 4 working section valve
5TIR110253	For 5 working section valve
5TIR110286L	For 6 working section valve
5TIR110322	For 7 working section valve

NOTE (*): Codes are referred to **BSP** thread.
(#): Codes are referred to **UN-UNF** thread.

Intermediate section

EIRE intermediate section

For DPX valves with two-side electrohydraulic controls.

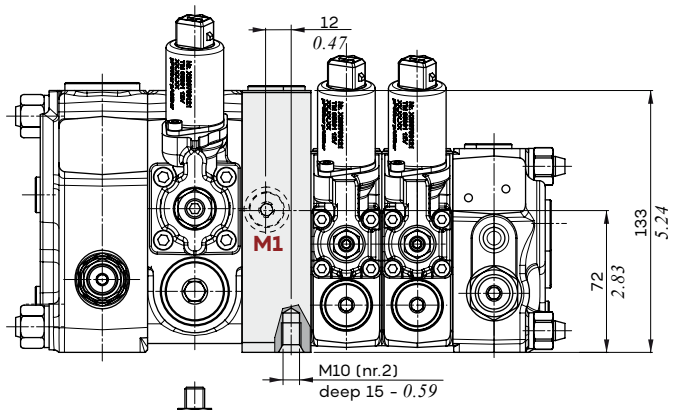

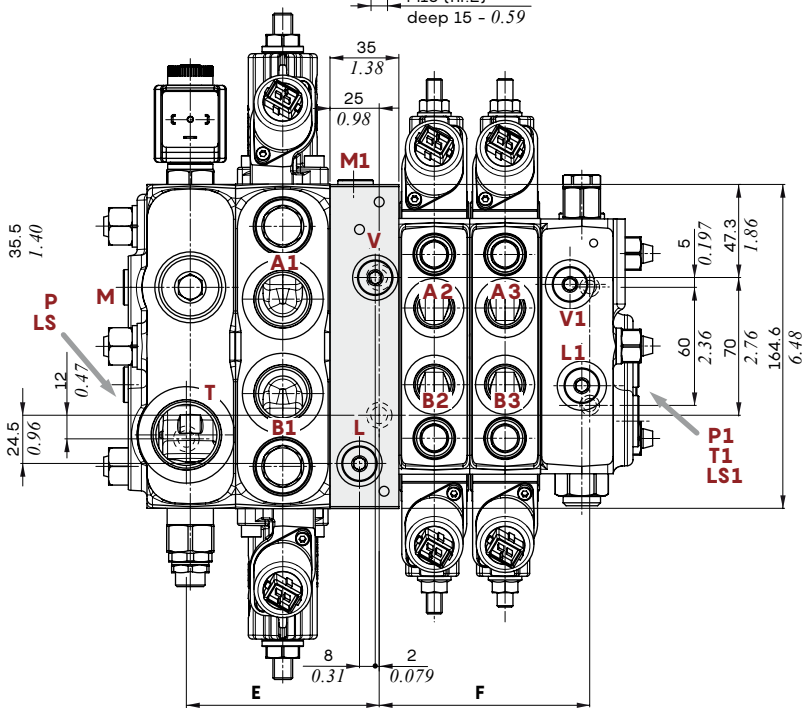

Nr. of working sections	E with M or N inlet sections mm		F with standard or HP sections mm	
1	98	3.86	-	-
2	146	5.75	107	4.21
3	194	7.64	143	5.63
4	242	9.53	179	7.05
5	290	11.42	215	8.46
6	338	13.31	251	9.88
7	-	-	287	11.30

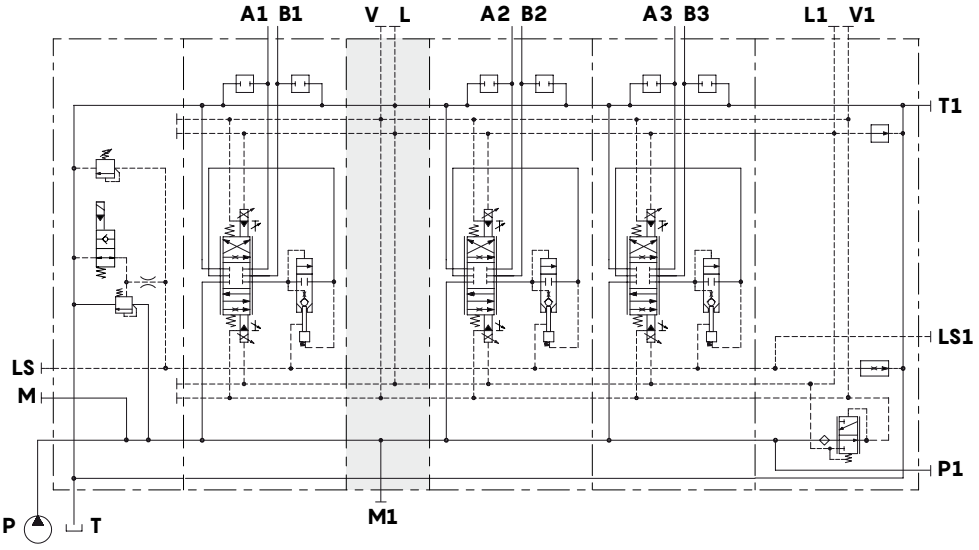

EIR intermediate section

For DPX valves with hydraulic or mechanical controls; for dimensions and port position see EIRE type on previous page.

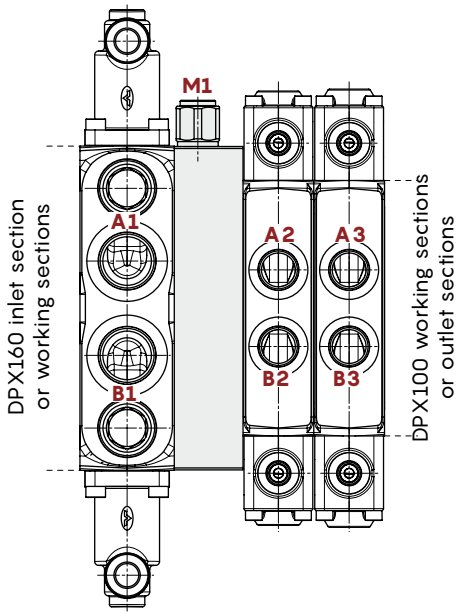

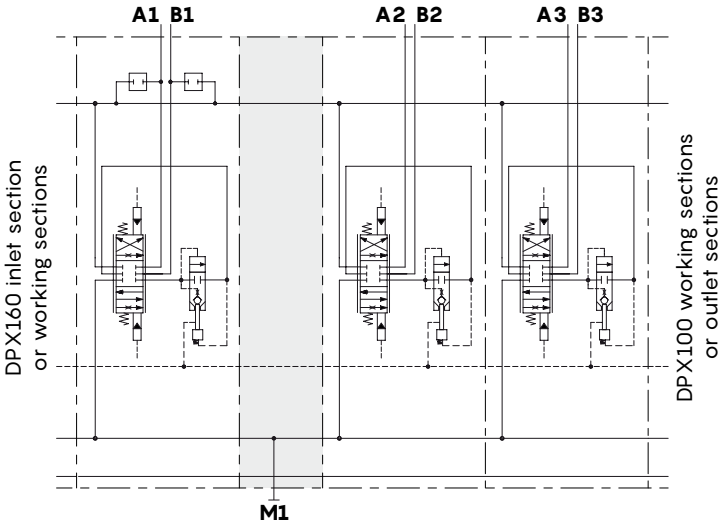

EIRZS intermediate section

For DPX valves with one-side electrohydraulic controls; for further dimensions see EIRE type on previous page.

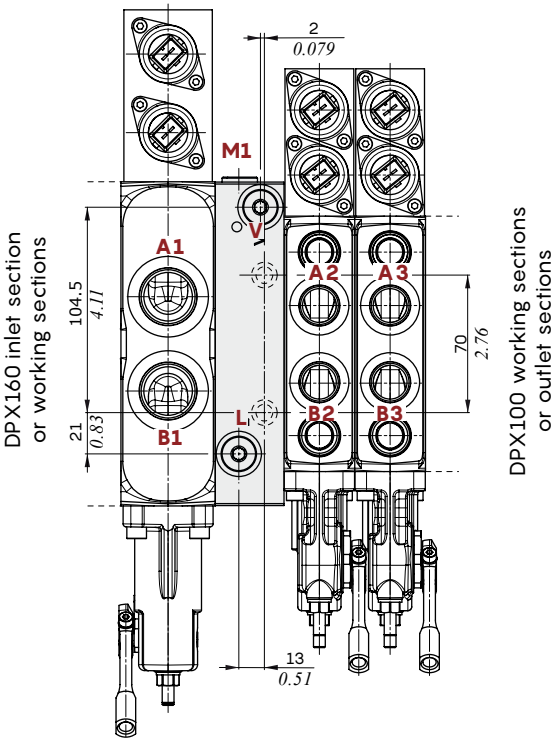

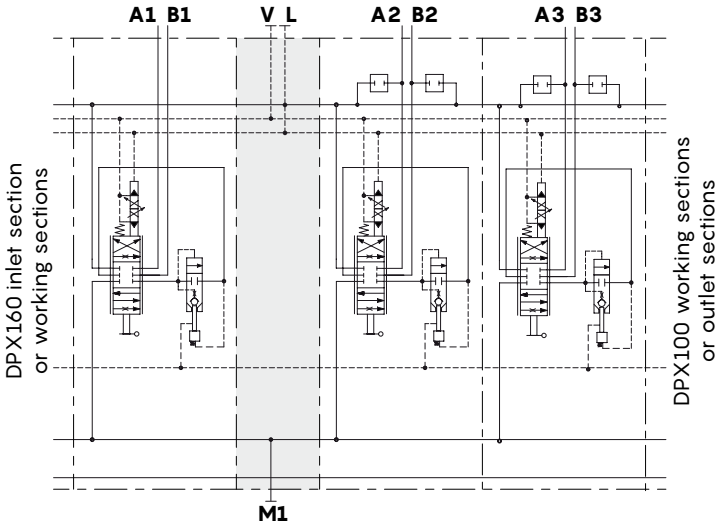

Coils and connectors

Coil type	Voltage	Connectors					
		ISO4400	Deutsch DT	AMP JPT	Packard Weatherpack	Packard Metri-pack	Flying leads (without conn.)
BER	10 VDC	4SLE001000A	-	-	-	-	-
	12 VDC	4SLE001200A 4SLE001217A[3]	4SLE001201A[5] 4SLE001209A[3-5] 4SLE001202A[6] 4SLE001216A[3-6] 4SLE001206A[2]	4SLE001203A[5] 4SLE001211A[3-5]	4SLE001210A[2]	4SLE001214A[2]	4SLE001207A
	14 VDC	-	4SLE001400A[6] 4SLE001401A[3-6] 4SLE001402A[3-5]	4SLE001403A[3-5]	-	-	-
	24 VDC	4SLE002400A 4SLE002408A[3] 4SLE302400A[1]	4SLE002401A[5] 4SLE002407A[3-5] 4SLE002402A[6]	4SLE002403A[5]	-	-	4SLE002404A
	28 VDC	-	4SLE002802A[6]	4SLE002800A[5]	-	-	-
	48 VDC	4SLE004800A 4SLE304800A[1]	-	-	-	-	-
	110VDC	4SLE011000A 4SLE311000A[1]	-	-	-	-	-
	220 VDC	4SLE022000A 4SLE322000A[1]	-	-	-	-	-
BE	12 VDC	4SL1000120	4SL1000123[6] 4SL1000140[3-6] 4SL1000124[2]	-	-	-	4SL1000122
	24 VDC	4SL1000240 4SL1030240[1]	4SL1002401[6]	-	-	-	-
	48 VDC	4SL1010480	-	-	-	-	-
	110 VDC	4SL1011100 4SL1031100[1]	-	-	-	-	-
	220 VDC	4SL1022200 4SL1032200[1]	-	-	-	-	-
BT	10 VDC	4SL3000100	-	-	-	-	-
	12 VDC	4SL3000120 4SL3000126[4]	4SL3000130[6] 4SL3000134[3-6] 4SL3000128[2]	4SL3000122[5] 4SL3001200[3-5]	4SL3000124[2]	4SL3000127[2]	4SL300012C
	24 VDC	4SL3000240 4SL3030240[1]	4SL3000249[6] 4SL300024C[3-6]	4SL3000248[5]	-	-	4SL3000246
	26 VDC	4SL3000260	-	-	-	-	-
	48 VDC	4SL3000480 4SL3030480[1]	-	-	-	-	-
	110 VDC	4SL3001100 4SL3031100[1]	-	-	-	-	-
	220 VDC	4SL3002200 4SL3032200[1]	-	-	-	-	
BPV	12 VDC	4SLA001200	-	-	-	-	-
	24 VDC	4SLA002400	-	-	-	-	-
D12	10,5 VDC	4SOL412011	4SOL412111[2]	-			-
	12 VDC	4SOL412012 4SOL412016[3]	4SOL412013[6] 4SOL412112[2] 4SOL412015[3-6] 4SOL412113[2-3]	-	-	-	4SOL412017[3]
	24 VDC	4SOL412024	4SOL412025[6] 4SOL412124[2] 4SOL412027[3-6]	4SOL412224[2]	-	-	-
Mating connectors (For connector with rectifier see following table)		4CN1009995	5CON140031	5CON003	5CON001	5CON017	-

Notes: [1] supply with AC and use only with rectifier connector - [2] with flying leads - [3] with bidirectional diode - [5] with unidirectional diode [5] integrated perpendicular type - [6] integrated parallel type

Voltage	ISO 4400 mating connector with rectifier				
	type **BER** coil	type **BT** coil	type **BPV** coil	type **BE** coil	type **D12** coil
24 VDC	4CN1010240	4CN3010240	-	4CN1010240	-
48 VDC	4CN1010480	4CN3010480	-	4CN1010480	-
110 VDC	4CN1011100	4CN3011100	-	4CN1011100	-
220 VDC	4CN1012200	4CN3012200	-	4CN1012200	-

Coils and connectors

Type BER

ISO4400 connector

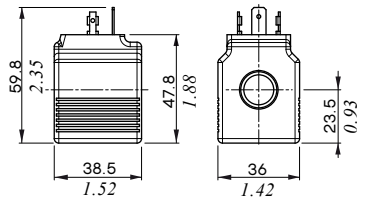

AMP JPT connector

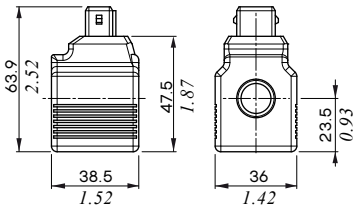

DEUTSCH DT04 connector
(parallel type)

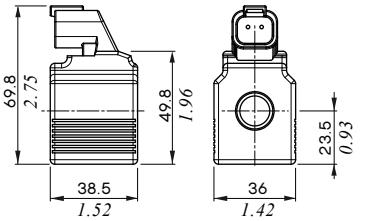

DEUTSCH DT04 connector
(perpendicular type)

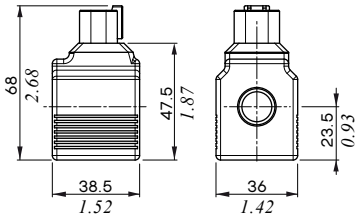

Features

Nominal voltage tolerance : ±10%
Power rating . . . . . : 19.2 W - 12/24 VDC - 48 RAC
: 19.1 W - 28 VDC
: 19 W - 10/14/48/110/220 VDC
24/110/220 RAC
Max. operating current . . . : 1.90 A - 10 VDC
: 1.60 A - 12 VDC
: 1.36 A - 14 VDC
: 0.80 A - 24 VDC
: 0.68 A - 28 VDC
: 0.40 A - 48 VDC
: 0.17 A - 110 VDC
: 0.09 A - 220 VDC
: 0.89 A - 24 RAC
: 0.45 A - 48 RAC
: 0.19 A - 110 RAC
: 0.09 A - 220 RAC
Coil insulance . . . . . : Class H (180°C - *356°F*)
Weather protection . . . . . : IP65 - ISO4400
: IP69K - Deutsch DT
: IP65 - AMP JPT
: IP67 - Weatherpack
: IP67 - Metri-pack
Insertion . . . . . : 100%

Flying leads

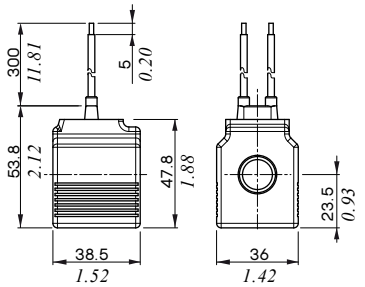

Flying leads with DEUTSCH DT04 connector

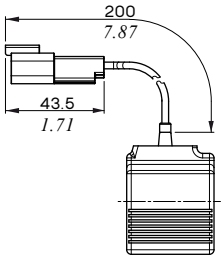

Flying leads with PACKARD WEATHER-PACK connector

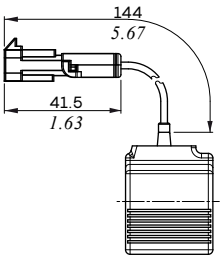

Flying leads with PACKARD METRI-PACK connector

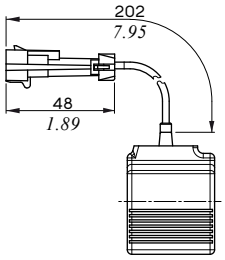

Type BE

ISO4400 connector

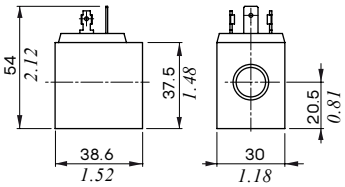

DEUTSCH DT04 connector

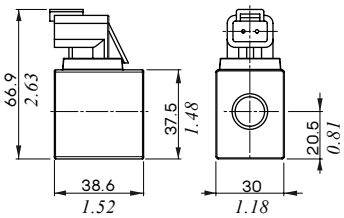

Features

Nominal voltage tolerance : ±10%
Power rating . . . . . : 18.7 W - 12 VDC
: 18.6 W - 24 VDC
: 17.3 W - 110 VDC
: 15.7 W - 220 VDC
: 18.3 W - 24 RAC
: 16 W - 110 RAC
: 16 W- 220 RAC
Max. operating current . . . : 1.56 A - 12 VDC
: 0.77 A - 24 VDC
: 0.157 A - 110 VDC
: 0.08 A - 220 VDC
: 0.85 A - 24 RAC
: 0.16 A - 110 RAC
: 0.08 A - 220 RAC
Coil insulance . . . . . : Class F (155°C - *311°F*)
Weather protection . . . . . : IP65 - ISO4400
: IP69K - Deutsch DT
Insertion . . . . . : 100%

Flying leads

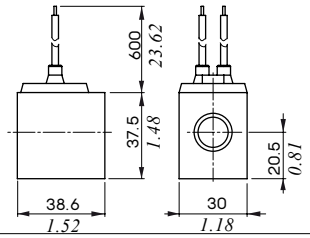

Flying leads with DEUTSCH DT04 connector

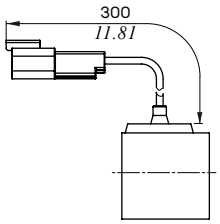

Coils and connectors

Type BT

ISO4400 connector

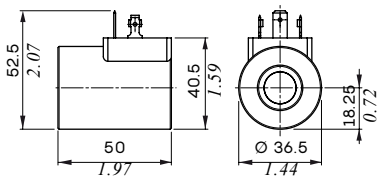

AMP JPT connector

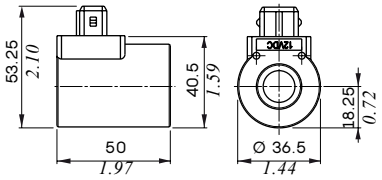

Flying leads

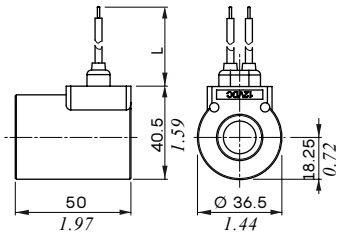

DEUTSCH DT04 connector

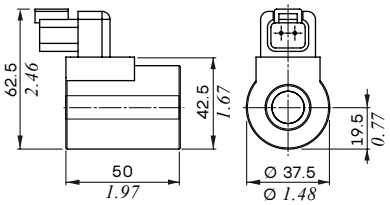

Coil type	L dimension (mm)	(in)
12VDC	247	9.72
24VDC	307	12.09

Features

Nominal voltage tolerance : ±10%
Power rating..... : 19 W - 10 VDC
: 21 W - 12/24/26 VDC
: 20.3 W - 48 VDC
: 17.3 W - 110 VDC
: 17.7 W - 220 VDC
: 19.9 W - 24 RAC
: 20.7 W - 48 RAC
: 20 W - 110 / 220 RAC
Max. operating current ... : 1.9 A - 10 VDC
: 1.77 A - 12 VDC
: 0.89 A - 24VDC
: 0.84 A - 26 VDC
: 0.43 A - 48 VDC
: 0.16 A - 110 VDC
: 0.08 A - 220 VDC
: 0.93 A - 24 RAC
: 0.47 A - 48 RAC
: 0.18 A - 110 RAC
: 0.09 A - 220 RAC
Coil insulance..... : Class F (155°C - 311°F)
Weather protection..... : IP65 - ISO4400
: IP69K - Deutsch DT
: IP65 - AMP JPT
: IP67 - Weatherpack
: IP67 - Metri-pack
Insertion..... : 100%

Flying leads with DEUTSCH DT04 connector

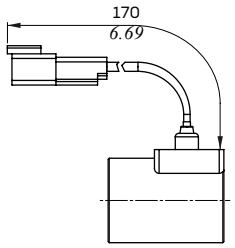

Flying leads with PACKARD WEATHER-PACK connector

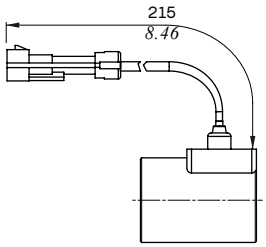

Flying leads with PACKARD METRI-PACK connector

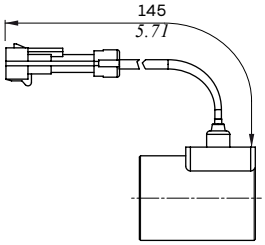

Type BPV

ISO4400 connector

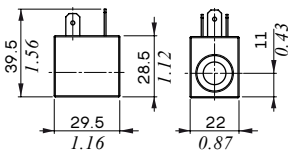

Flying leads

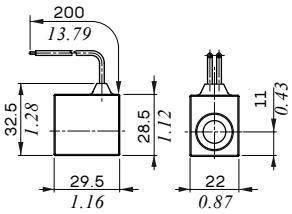

Features

Nominal voltage tolerance : ±10%
Power rating..... : 8 W - 12/24 VDC
Max. operating current ... : 0.67 A - 12 VDC
: 0.33 A - 24VDC
Coil Insulance..... : Class H (180°C - 356°F)
Weather protection..... : IP65 - ISO4400
Insertion..... : 100%

Coils and connectors

Type D12

ISO4400 connector

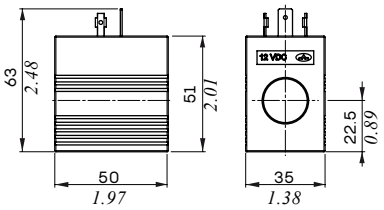

DEUTSCH DT04 connector
(with or without bidirectional diode)

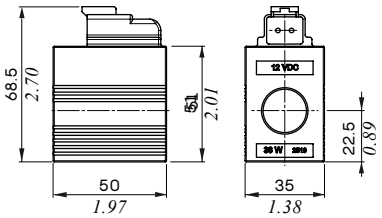

Features

Nominal voltage tolerance : ±10%
Power rating..... : 36 W - 10.5/12/24 VDC
Max. operating current ... : 3,43 A - 10.5 VDC
: 3 A - 12 VDC
: 1.5 A - 24VDC
Coil insulance..... : Class H (180°C - *356°F*)
Weather protection..... : IP65 - ISO4400
: IP69K - Deutsch DT
: IP65 - AMP JPT
Insertion..... : 100%

Flying leads

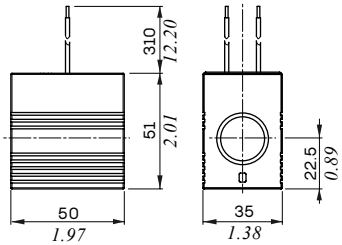

Flying leads with DEUTSCH DT04 connector

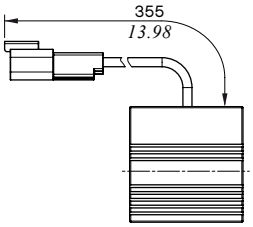

Flying leads with AMP JPT connector

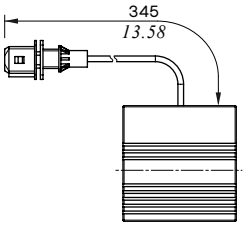

Main rules

The DPX series valves are assembled and tested as per the technical specifications of this catalogue.
Before the final installation on your equipment, please follow the below recommendations:

- the valve can be assembled in any position; in order to prevent body deformation and spool sticking mount the product on a flat surface;
- In order to prevent the possibility of water entering the spool control kit, do not use high pressure washdown directly on the valve;
- prior to painting, ensure plugs on normally open ports are tightly in place.

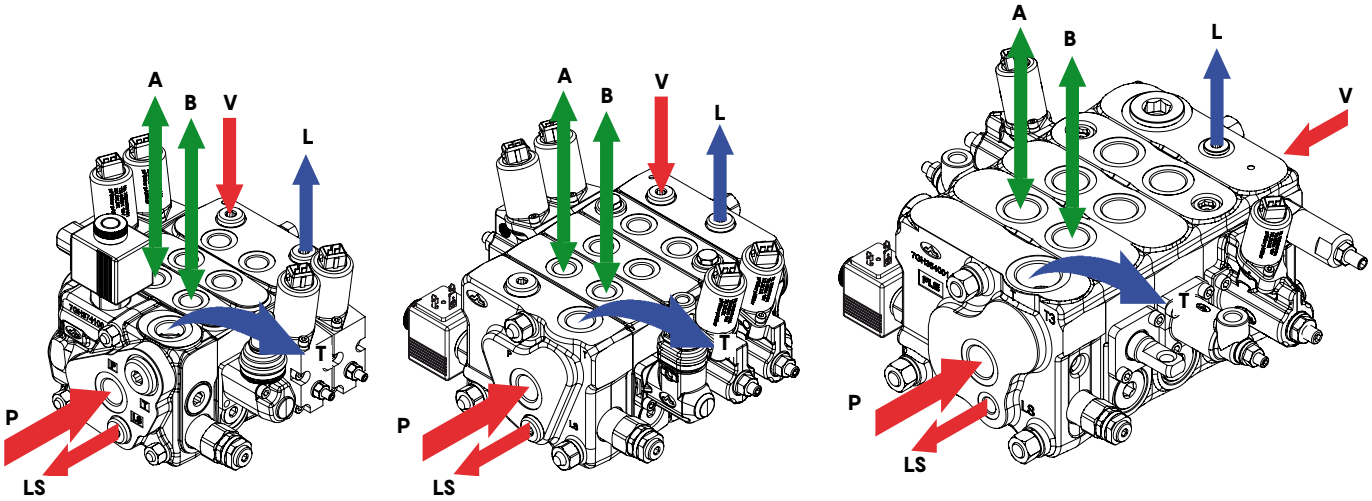

	FITTING TIGHTENING TORQUE – Nm / *lbft*								
THREAD TYPE		P inlet port		A and B workports			T outlet port		LS signal port	V and L ports
DPX050	BSP	G 1/2		G 3/8			G 1/2		G 1/4	G 1/4
	With O-Ring seal	50 / *36.9*		35 / *35.8*			50 / *36.9*		25 / *18.4*	25 / *18.4*
	With copper washer	60 / *44.3*		40 / *29.5*			60 / *44.3*		30 / *22.1*	30 / *22.1*
	With steel and rubber washer	60 / *44.3*		30 / *22.1*			60 / *44.3*		16 / *11.8*	16 / *11.8*
	UN-UNF	3/4-16 (SAE 8)		6/16-18 (SAE 6)			3/4-16 (SAE 8)		9/16-18 (SAE 6)	9/16-18 (SAE 6)
	With O-Ring seal	35 / *25.8*		30 / *22.1*			35 / *25.8*		30 / *22.1*	30 / *22.1*
DPX100	BSP	G 1/2	G 3/4	G 3/8	G 1/2	G 3/4	G 1/2	G 3/4	G 1/4	G 1/4
	With O-Ring seal	50 / *36.9*	90 / *66.4*	35 / *35.8*	50 / *36.9*	90 / *66.4*	50 / *36.9*	90 / *66.4*	25 / *18.4*	25 / *18.4*
	With copper washer	60 / *44.3*	90 / *66.4*	40 / *29.5*	60 / *44.3*	90 / *66.4*	60 / *44.3*	90 / *66.4*	30 / *22.1*	30 / *22.1*
	With steel and rubber washer	60 / *44.3*	70 / *51.6*	30 / *22.1*	60 / *44.3*	70 / *51.6*	60 / *44.3*	70 / *51.6*	16 / *11.8*	16 / *11.8*
	UN-UNF	7/8-14 (SAE 10)		3/4-16 (SAE 8)	1 1/16-12 (SAE 12)		7/8-14 (SAE 10)		9/16-18 (SAE 6)	9/16-18 (SAE 6)
	With O-Ring seal	90 / *66.4*		35 / *25.8*	95 / *70.1*		90 / *66.4*		30 / *22.1*	30 / *22.1*
DPX160	BSP	G 3/4		G 3/4			G 1		G 1/4	G 1/4
	With O-Ring seal	90 / *66.4*		90			100 / *73.8*		25 / *18.4*	25 / *18.4*
	With copper washer	90 / *66.4*		90			90 / *66.4*		30 / *22.1*	30 / *22.1*
	With steel and rubber washer	70 / *51.6*		70			100 / *73.8*		16 / *11.8*	16 / *11.8*
	UN-UNF	1 1/16-12 (SAE 12)		1 1/16-12 (SAE 12)			1 5/16-12 (SAE 16)		9/16-18 (SAE 6)	9/16-18 (SAE 6)
	With O-Ring seal	95 / *70.1*		95 / *70.1*			150 / *100.6*		30 / *22.1*	30 / *22.1*

NOTE - These torques are recommended. Assembly tightening torque depends on many factors, including lubrication, coating and surface finish.

Connection between two directional valves

All the examples shown allow contemporary workports operations.
With two or more DPX Series valves connected as shown, only one bleed valve is needed, on the last DPX valve and it is necessary to blank plugs on the others valves.
However if DPX valves are far from each other or configured with many sections, the Bleed valve may be required on each directional valve.

Example 1: connection between DPX series valves, Open Center circuit

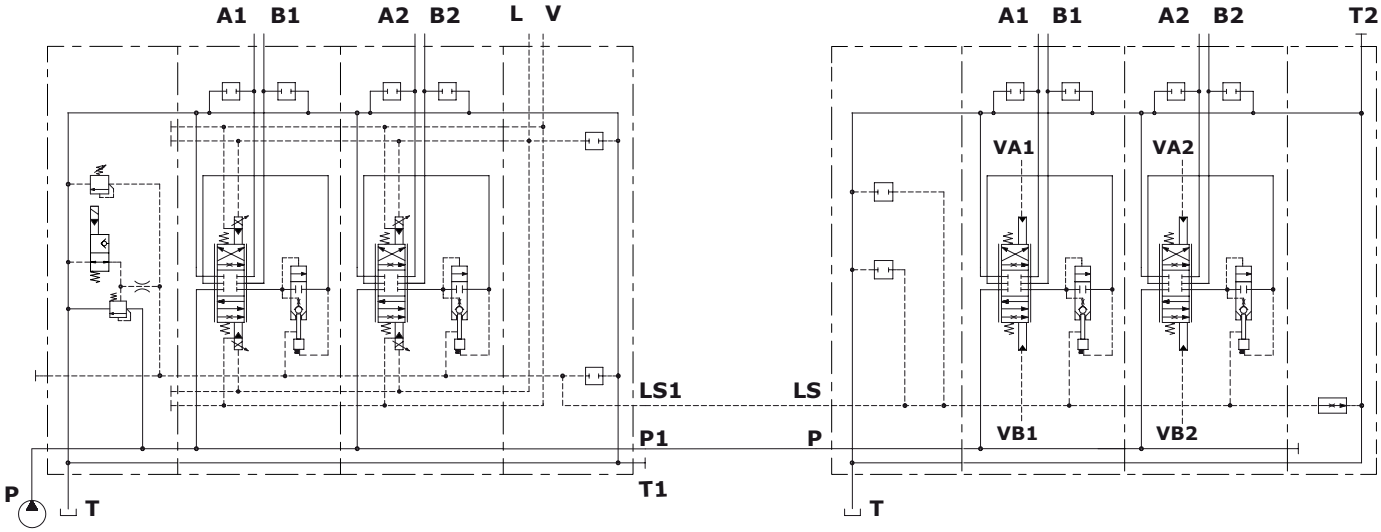

Example 2: connection between DPX series and DPC series valves, Open Center circuit

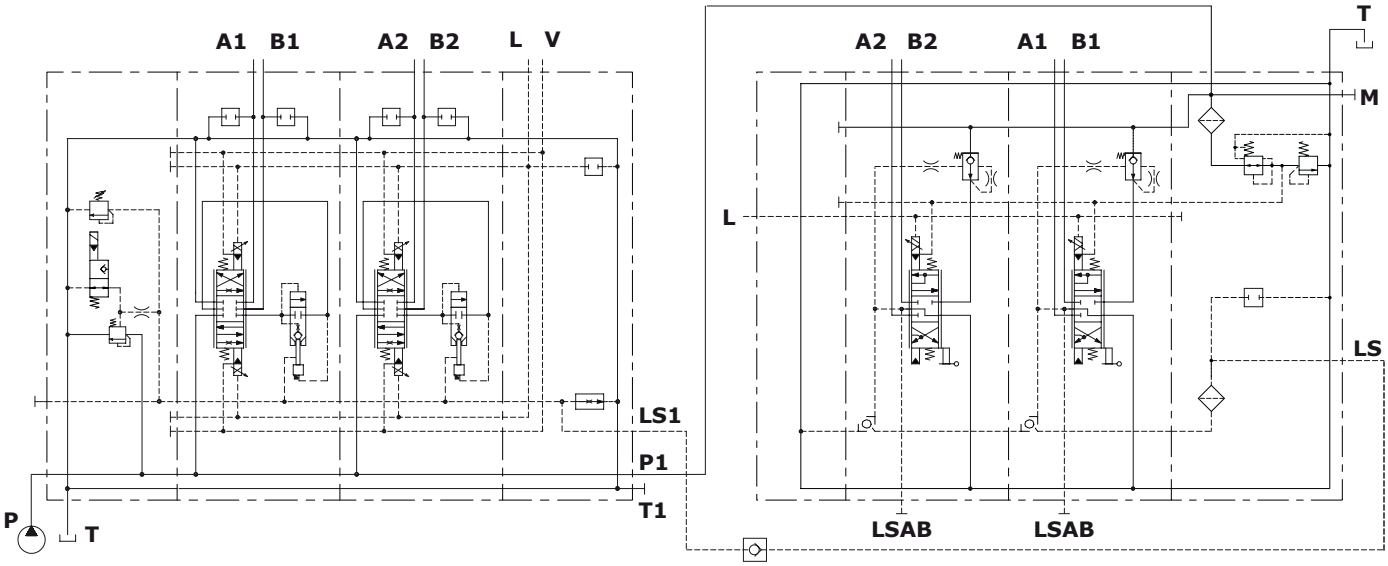

Check valve on L.S. line

Connection between two directional valves

Example 3: connection between DPX series valves, Closed Center circuit

Bleed valve has to be installed only on one DPX valve

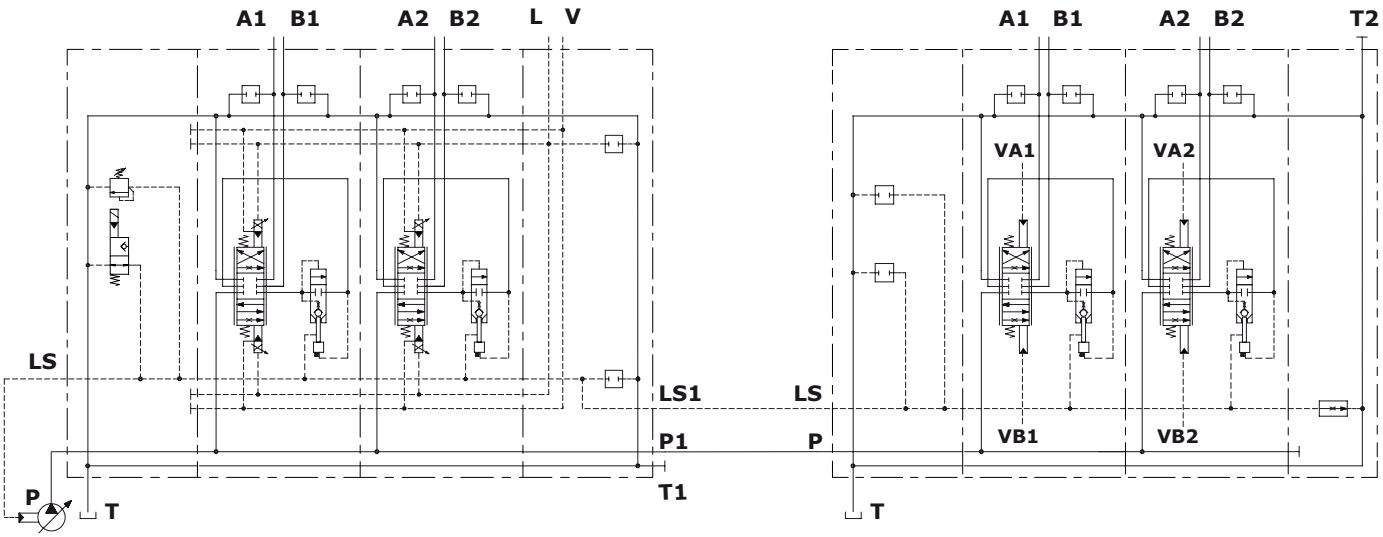

NOTE: if there is a big distance between the valves, the following circuit is suggested.

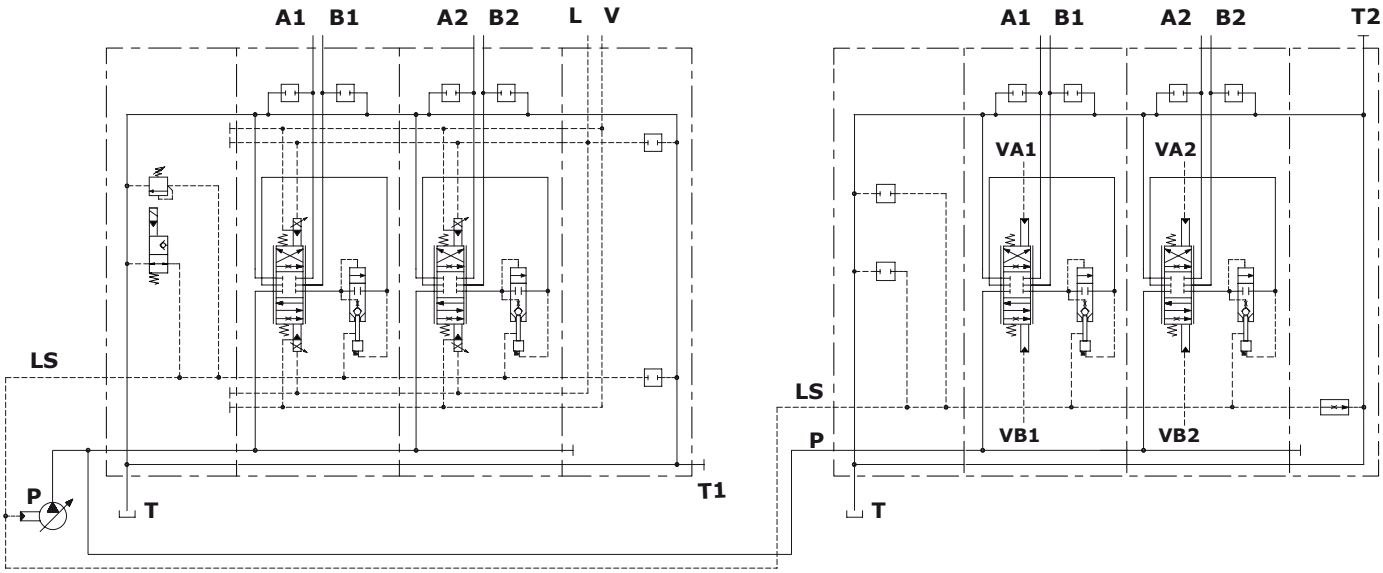

Connection between two directional valves

Example 4: connection between DPX series and DPC series valves, Closed Center circuit

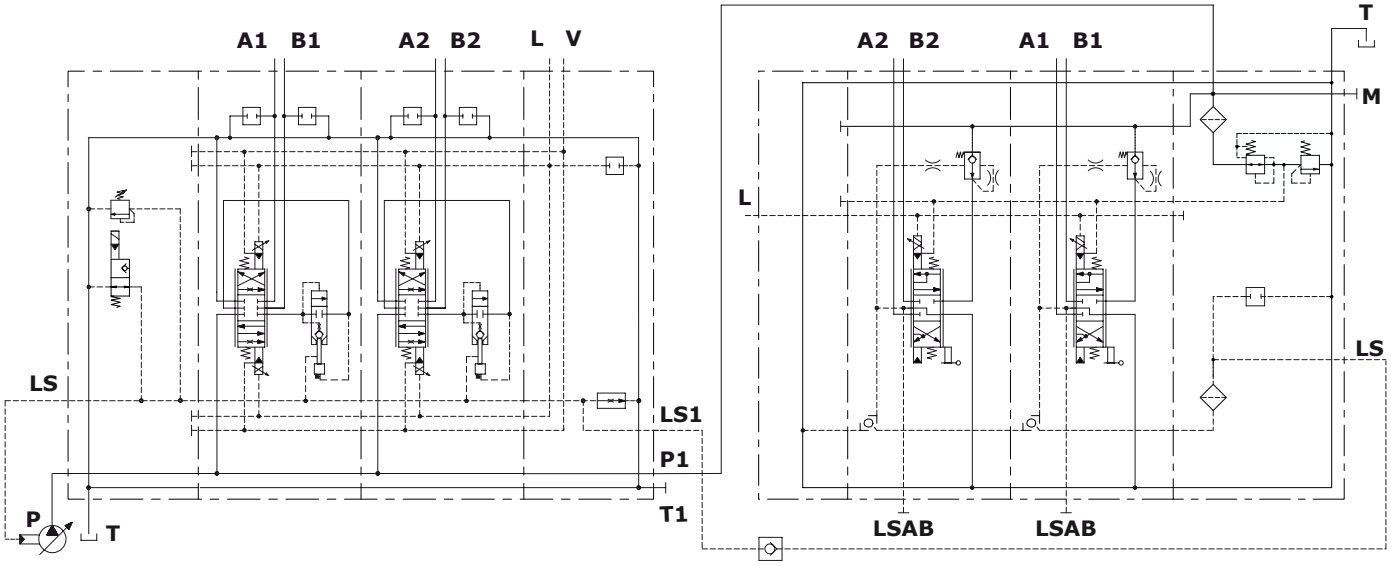

Check valve on L.S. line

Electrohydraulic control connection

On/off electrohydraulic control

See below an example of on/off control for a working section.

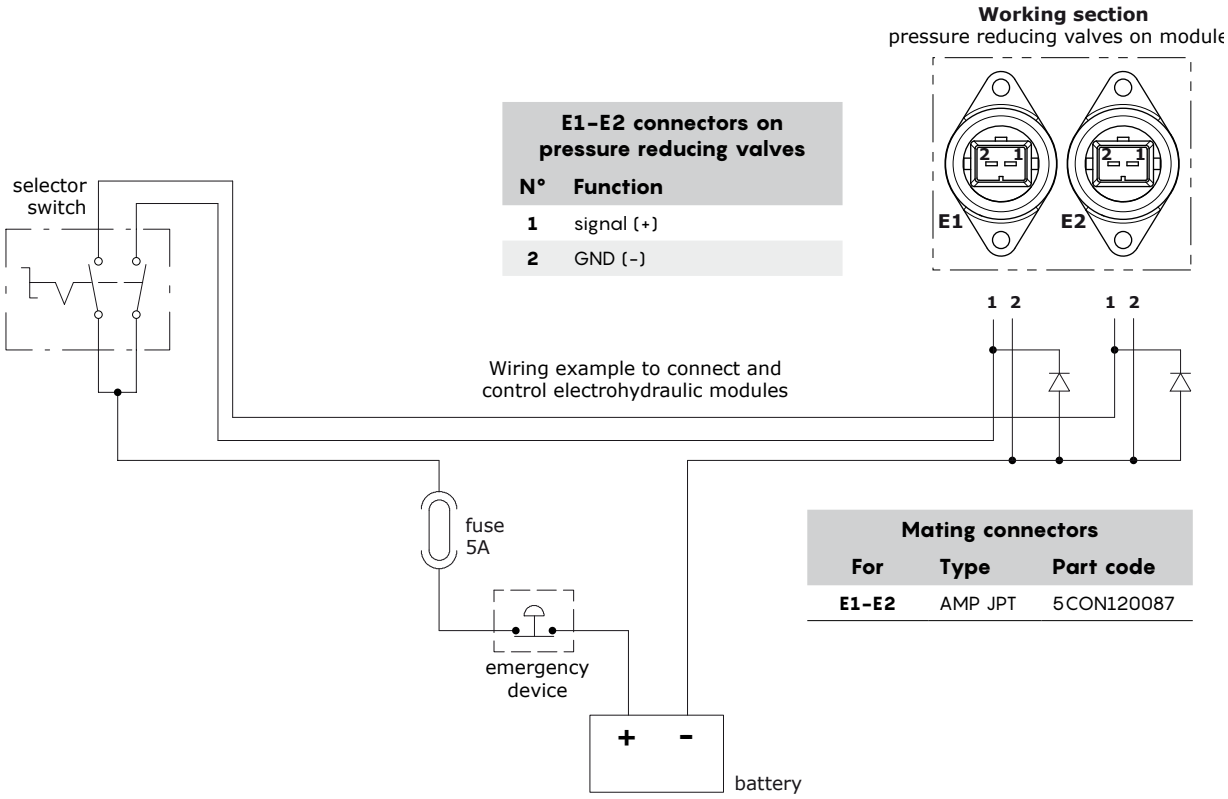

E1-E2 connectors on pressure reducing valves	
N°	**Function**
1	signal (+)
2	GND (-)

Mating connectors		
For	**Type**	**Part code**
E1-E2	AMP JPT	5CON120087

Electrohydraulic control connection

Proportional electrohydraulic control

See below a proportional control system for two working sections, equipped with a proportional analog Hall-effect joystick. The circuit is a connection example, the pin-out refers to standard devices; for ordering codes, detailed information and customization, please contact our Sales Department.

E1-E4 connectors on pressure reducing valves

Nr	Function
1	signal (+)
2	GND (-)

J1 joystick connector

Nr	Function	N°	Function
1	VJ+	7	/
2	VJ-	8	VJ+
3	/	9	operator presence
4	X axis	10	/
5	Y axis	11	/
6	/	12	/

D1 control unit connector

Nr	Function	Nr	Function
1	Vbb (+)	7	/
2	/	8	/
3	/	9	/
4	operator pres.	10	X axis
5	/	11	Y axis
6	/	12	GND (-)

D2 control unit connector

Nr	Function	Nr	Function
1	/	7	/
2	valve E2 (+)	8	valves E3/E4 (-)
3	valve E4 (+)	9	valves E1/E2 (-)
4	valve E3 (+)	10	/
5	/	11	valve E1 (+)
6	/	12	/

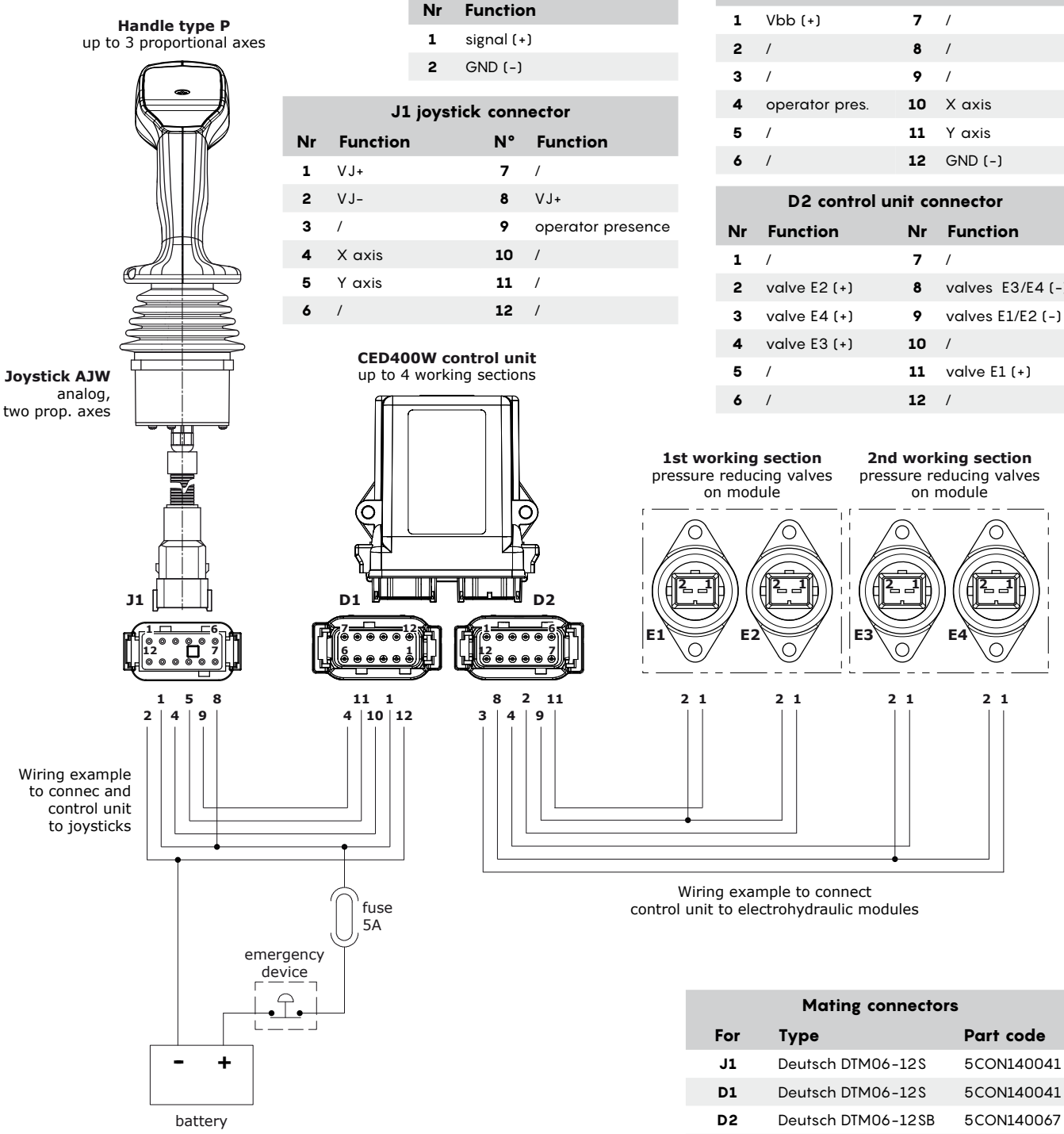

Mating connectors

For	Type	Part code
J1	Deutsch DTM06-12S	5CON140041
D1	Deutsch DTM06-12S	5CON140041
D2	Deutsch DTM06-12SB	5CON140067
E1-E4	AMP JPT	5CON120087

Appendix A

Electrohydraulic controls: hysteresis calculation rule

Hysteresis is calculated as the difference between control currents (I_2-I_1), needed to reach 50% of nominal spool stroke, referred to maximum control current I_{MAX}, needed to reach 100% of spool stroke.
I_2 is determined on spool stroke increase line, I_1 is determined on spool stroke decrease line.

Example diagram for data detection

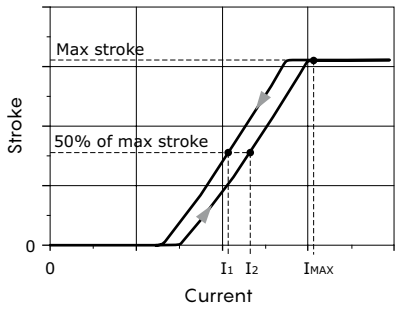

$$\text{Hysteresis } \% = \frac{I_2 - I_1}{I_{MAX}} \times 100$$

WALVOIL NEL MONDO | WALVOIL WORLDWIDE

WALVOIL S.P.A.
DIREZIONE E COORDINAMENTO INTERPUMP GROUP S.P.A.
Sede principale, Filiali e Uffici di rappresentanza
Headquarters, Subsidiaries and Representative Offices

WALVOIL S.P.A. SEDE PRINCIPALE | HEADQUARTERS
Via Adige, 13/D . 42124 Reggio Emilia . Italy
TEL. +39 0522 932411
info@walvoil.com | www.walvoil.com

AUSTRALASIA | AUSTRALASIA

WALVOIL FLUID POWER AUSTRALASIA PTY LTD
6 Leonard Avenue . Toukley NSW 2263 . Sydney . Australia
TEL. +61 413 739 938
australasia@walvoil.com

BRASILE | BRAZIL

INTERPUMP HYDRAULICS BRASIL LTDA | WALVOIL DIVISION
Rua Gilberto de Zorzi, 525 . Bairro Forqueta 95115-730
Caxias do Sul (RS)
TEL. +55 54 3289 7000
infobrasil@walvoil.com

CANADA | CANADA

WALVOIL CANADA INC.
3100, Rue Jacob Jordan . Terrebonne . Qc J6X 4J6 . Canada
TEL. +1 450 477 1076 Ext:225
info@walvoilcanada.com | www.walvoilcanada.com

CINA | CHINA

WALVOIL FLUID POWER (DONGGUAN) CO. LTD
1st Floor, the Third Factory Area, Sijia, Shijie Town, Dongguan City
Guangdong province. China.
TEL. +86 769 81816189-8020
info@walvoil.com.cn | www.walvoil.com.cn

COREA DEL SUD | SOUTH KOREA

WALVOIL FLUID POWER KOREA LTD.
(17818)80-15, Oseongsandan 1Ro, Oseong-myun,
Pyeongtaek-si Gyeonggi-do
Republic of Korea 451-872
TEL. +82 31 682 6030
info@walvoil.co.kr | www.walvoil.co.kr

FRANCIA | FRANCE

WALVOIL FLUID POWER FRANCE
362 rue de La Jaunais . Vritz . 44540 Vallons-de-l'Erdre
TEL. +33 2 41 94 41 06
france@walvoil.com

INDIA | INDIA

WALVOIL FLUID POWER (INDIA) PVT. LTD.
No. 1, 2nd Cross, 2nd Main, KIADB Industrial Area, Attibele, Anekal Taluk
Bangalore - 562107 .
TEL. +91 80 0614 24000
info@walvoil.co.in | www.walvoil.co.in

MESSICO | MEXICO

WALVOIL FLUID POWER MEXICO S.A. DE C.V.
Calle Julian Sepulveda Davila #109
CP. 66640 . Apodaca
Nuevo León . Mexico

U.S.A. | U.S.A.

WALVOIL FLUID POWER CORP. | HEADQUARTERS
4111 North Garnett Tulsa, OK 74116, USA
TEL. +1 918 858 7100
info@walvoilusa.com | www.walvoilusa.com

WALVOIL FLUID POWER CORP
1109, Technology Drive . Red Wing . MN 55066 . U.S.A.
TEL. +1 651 212 6400
info@walvoilusa.com | www.walvoilusa.com

D2WWED02A
1st edition February 2026